YARIS VERSO / ECHO VERSO ELECTRICAL WIRING DIAGRAM SYSTEM CIRCUITS

English

	Page
ABS	242
AIR CONDITIONER	268
BACK-UP LIGHT	174
CHARGING	132
CIGARETTE LIGHTER	178
CLOCK (w/o MULTI DISPLAY)	226
COMBINATION METER (ANALOG TYPE)	246
COMBINATION METER (DIGITAL TYPE)	250
DOOR LOCK CONTROL	190
DOUBLE LOCKING	202
ECT	230
ENGINE CONTROL	134
ENGINE IMMOBILISER SYSTEM	142
FRONT FOG LIGHT	154
FRONT WIPER AND WASHER	182
HEADLIGHT (w/ DAYTIME RUNNING LIGHT)	144
HEADLIGHT (w/o DAYTIME RUNNING LIGHT)	148
HEADLIGHT BEAM LEVEL CONTROL (w/ DAYTIME RUNNING LIGHT)	150
HEADLIGHT BEAM LEVEL CONTROL (w/o DAYTIME RUNNING LIGHT)	152
HORN	188
INTERIOR LIGHT	176
LIGHT REMINDER BUZZER	180
MOON ROOF	214
MULTI DISPLAY	222
POWER OUTLET	228
POWER SOURCE (LHD)	120
POWER SOURCE (RHD)	124
POWER WINDOW (LHD)	206
POWER WINDOW (RHD)	210
PTC HEATER	264
RADIATOR FAN AND CONDENSER FAN	266
RADIO AND PLAYER	224
REAR FOG LIGHT (w/ DAYTIME RUNNING LIGHT)	156
REAR FOG LIGHT (w/o DAYTIME RUNNING LIGHT)	158
REAR WINDOW DEFOGGER AND MIRROR HEATER	258
REAR WIPER AND WASHER	186

	Page
REMOTE CONTROL MIRROR	218
SEAT HEATER (LHD)	256
SHIFT LOCK	220
SRS	237
STARTING AND IGNITION	128
STOP LIGHT	172
TAILLIGHT AND ILLUMINATION (w/ DAYTIME RUNNING LIGHT)	160
TAILLIGHT AND ILLUMINATION (w/o DAYTIME RUNNING LIGHT)	164
TURN SIGNAL AND HAZARD WARNING LIGHT	168
TWO WAY FLOW HEATER	260
WIRELESS DOOR LOCK CONTROL	196

SCHEMA DE CABLAGE ELECTRIQUE DE LA YARIS VERSO / ECHO VERSO CIRCUITS DU SYSTEME

Français

	Page
ABS	242
AFFICHEUR MULTIFONCTIONS	222
AIR CONDITIONNE	268
ALLUME-CIGARE	178
AUTORADIO ET LECTEUR DE CASSETTES	224
AVERTISSEUR	188
AVERTISSEUR SONORE DE RAPPEL DE DISPOSITIFS D'ECLAIRAGE ALLUMES	180
CHARGE	132
CHAUFFAGE A DEUX VOIES	260
CHAUFFAGE DE PTC	264
CHAUFFAGE DE SIEGE (CONDUITE A GAUCHE)	256
COMBINE DE BORD (TYPE ANALOGIQUE)	246
COMBINE DE BORD (TYPE NUMERIQUE)	250
COMMANDE DE CONDAMNATION DE PORTE	190
COMMANDE DE CONDAMNATION DE PORTE A COMMANDE RADIO	196
COMMANDE DE MOTEUR	134
COMMANDE DE REGLAGE D'ORIENTATION DE FAISCEAU DE PROJECTEUR (AVEC UN SYSTEME D'ECLAIRAGE DE CONDUITE DE JOUR)	150
COMMANDE DE REGLAGE D'ORIENTATION DE FAISCEAU DE PROJECTEUR (SANS SYSTEME D'ECLAIRAGE DE CONDUITE DE JOUR)	152
DEMARRAGE ET ALLUMAGE	128
DESEMBUEUR DE GLACE DE LUNETTE ARRIERE ET RESISTANCE	258
ELECTRIQUE DE CHAUFFAGE DE RETROVISEUR	258
DOUBLE VERROUILLAGE	202
ECT	230
ESSUIE-GLACE ET LAVE-GLACE DE LUNETTE ARRIERE	186
ESSUIE-GLACE ET LAVE-GLACE DE PARE-BRISE	182
FEUX DE POSITION ARRIERE ET DISPOSITIF D'ECLAIRAGE (AVEC UN SYSTEME D'ECLAIRAGE DE CONDUITE DE JOUR)	160
FEUX DE POSITION ARRIERE ET DISPOSITIF D'ECLAIRAGE (SANS SYSTEME D'ECLAIRAGE DE CONDUITE DE JOUR)	164
FEUX DE RECUL	174
FEUX STOP	172
LEVE-GLACE ELECTRIQUE (CONDUITE A DROITE)	210
LEVE-GLACE ELECTRIQUE (CONDUITE A GAUCHE)	206

	Page
MONTRE ELECTRIQUE DE BORD (SANS AFFICHEUR MULTIFONCTIONS)	226
PLAFONNIER	176
PRISE D'ALIMENTATION	228
PROJECTEUR ANTIBROUILLARD ARRIERE (AVEC UN SYSTEME D'ECLAIRAGE DE CONDUITE DE JOUR)	156
PROJECTEUR ANTIBROUILLARD ARRIERE (SANS SYSTEME D'ECLAIRAGE DE CONDUITE DE JOUR)	158
PROJECTEUR ANTIBROUILLARD AVANT	154
PROJECTEUR AVANT (AVEC UN SYSTEME D'ECLAIRAGE DE CONDUITE DE JOUR)	144
PROJECTEUR AVANT (SANS SYSTEME D'ECLAIRAGE DE CONDUITE DE JOUR)	148
RETROVISEUR A COMMANDE ELECTRIQUE	218
SOURCE D'ALIMENTATION (CONDUITE A DROITE)	124
SOURCE D'ALIMENTATION (CONDUITE A GAUCHE)	120
SRS	237
SYSTEME IMMOBILISATEUR DE MOTEUR	142
TOIT OUVRANT	214
VENTILATEUR DE RADIATEUR ET VENTILATEUR DE CONDENSEUR	266
VERROUILLAGE DE SECURITE DE CHANGEMENT DE VITESSES	220
VOYANT DE RAPPEL DE FEU DE CHANGEMENT DE DIRECTION ET DE FEUX DE DETRESSE	168

YARIS VERSO / ECHO VERSO DIAGRAMA DEL CABLEADO ELECTRICO CIRCUITOS DE SISTEMAS

Página

ABS 242
ACONDICIONADOR DE AIRE 268
ALIMENTACION (DIRECCION A LA DERECHA) 124
ALIMENTACION (DIRECCION A LA IZQUIERDA) 120
ARRANQUE Y ENCENDIDO 128
BLOQUEO DE CAMBIOS 220
BOCINA 188
CALEFACTOR DE FLUJO DE DOS VIAS 260
CALEFACTOR DE PTC 264
CALEFACTOR DEL ASIENTO (DIRECCION A LA IZQUIERDA) 256
CARGA 132
CONTROL DE BLOQUEO DE LA PUERTA 190
CONTROL DE BLOQUEO DE LA PUERTA INALAMBRICO 196
CONTROL DEL MOTOR 134
CONTROL DEL NIVEL DEL HAZ DEL FARO (CON LUZ DE MARCHA DIURNA) 150
CONTROL DEL NIVEL DEL HAZ DEL FARO (SIN LUZ DE MARCHA DIURNA) 152
DESEMPANADOR DE LA VENTANILLA TRASERA Y CALEFACTOR DEL RETROVISOR 258
DOBLE CIERRE 202
ECT 230
ENCENDEDOR DE CIGARRILLOS 178
ESPEJO RETROVISOR DE CONTROL REMOTO 218
FARO (CON LUZ DE MARCHA DIURNA) 144
FARO (SIN LUZ DE MARCHA DIURNA) 148
LIMPIADOR Y LAVADOR DEL PARABRISAS 182
LIMPIADOR Y LAVADOR TRASEROS 186
LUZ ANTINIEBLA FRONTAL 154
LUZ ANTINIEBLA TRASERA (CON LUZ DE MARCHA DIURNA) 156
LUZ ANTINIEBLA TRASERA (SIN LUZ DE MARCHA DIURNA) 158
LUZ DE COLA E ILUMINACION (CON LUZ DE MARCHA DIURNA) 160
LUZ DE COLA E ILUMINACION (SIN LUZ DE MARCHA DIURNA) 164
LUZ DE MARCHA ATRAS 174
LUZ DE PARADA 172
LUZ INTERIOR 176

	Página
MEDIDOR DE COMBINACION (TIPO ANALOGICO)	246
MEDIDOR DE COMBINACION (TIPO DIGITAL)	250
RADIO Y REPRODUCTOR	224
RELOJ (SIN VISUALIZADOR MULTIPLE)	226
SENAL DE GIRO Y LUZ DE ADVERTENCIA DE PELIGRO	168
SISTEMA INMOVILIZADOR DEL MOTOR	142
SRS	237
TECHO LUNAR	214
TOMA DE ALIMENTACION	228
VENTANILLA AUTOMATICA (DIRECCION A LA DERECHA)	210
VENTANILLA AUTOMATICA (DIRECCION A LA IZQUIERDA)	206
VENTILADOR DEL RADIADOR Y VENTILADOR DEL CONDENSADOR	266
VISUALIZADOR MULTIPLE	222
ZUMBADOR RECORDATORIO DE LAS LUCES	180

YARIS VERSO / ECHO VERSO ELEKTRISCHE SCHALTPLÄNE SYSTEMSCHALTKREISE

	Seite
ABS	242
ANLASSEN UND ZÜNDUNG	128
BELEUCHTUNGSWARNSUMMER	180
BLINK- UND WARNBLINKLEUCHTEN	168
BREMSLEUCHTE	172
DOPPELSPERRE	202
ECT	230
ELEKTRISCH EINSTELLBARER AUSSENSPIEGEL	218
FENSTERHEBER (LINKSLENKER)	206
FENSTERHEBER (RECHTSLENKER)	210
HECKSCHEIBEN- UND AUSSENSPIEGELHEIZUNG	258
HECKSCHEIBENWISCHER UND -WASCHER	186
HUPE	188
INNENLEUCHTE	176
KLIMAANLAGE	268
KOMBIINSTRUMENT (ANALOGTYP)	246
KOMBIINSTRUMENT (DIGITALTYP)	250
LADESYSTEM	132
LEUCHTWEITENSTELLUNG (MIT TAGESFAHRLEUCHTE)	150
LEUCHTWEITENSTELLUNG (OHNE TAGESFAHRLEUCHTE)	152
LÜFTER UND KONDENSATORLÜFTER	266
MEHRFACHANZEIGE	222
MONDDACH	214
MOTORSTEUERUNG	134
NEBELSCHEINWERFER	154
NEBELSCHLUSSLEUCHTE (MIT TAGESFAHRLEUCHTE)	156
NEBELSCHLUSSLEUCHTE (OHNE TAGESFAHRLEUCHTE)	158
PTC-HEIZUNG	264
RADIO UND CASSETTENSPIELER	224
RÜCKFAHRSCHEINWERFER	174
SCHALTSPERR	220
SCHEIBENWISCHER UND -WASCHER	182
SCHEINWERFER (MIT TAGESFAHRLEUCHTE)	144
SCHEINWERFER (OHNE TAGESFAHRLEUCHTE)	148
SCHLUSSLEUCHTE UND BELEUCHTUNG (MIT TAGESFAHRLEUCHTE)	160
SCHLUSSLEUCHTE UND BELEUCHTUNG (OHNE TAGESFAHRLEUCHTE)	164

	Seite
SITZHEIZUNG (LINKSLENKER)	256
SRS	237
STROMBUCHSE	228
STROMQUELLE (LINKSLENKER)	120
STROMQUELLE (RECHTSLENKER)	124
TÜRVERRIEGELUNG	190
TÜRVERRIEGELUNGSFERNBEDIENUNG	196
UHR (OHNE MEHRFACHANZEIGE)	226
WEGFAHRSPERRE	142
ZIGARETTENANZÜNDER	178
ZWEIWEGSTROMHEIZUNG	260

POWER SOURCE (LHD)

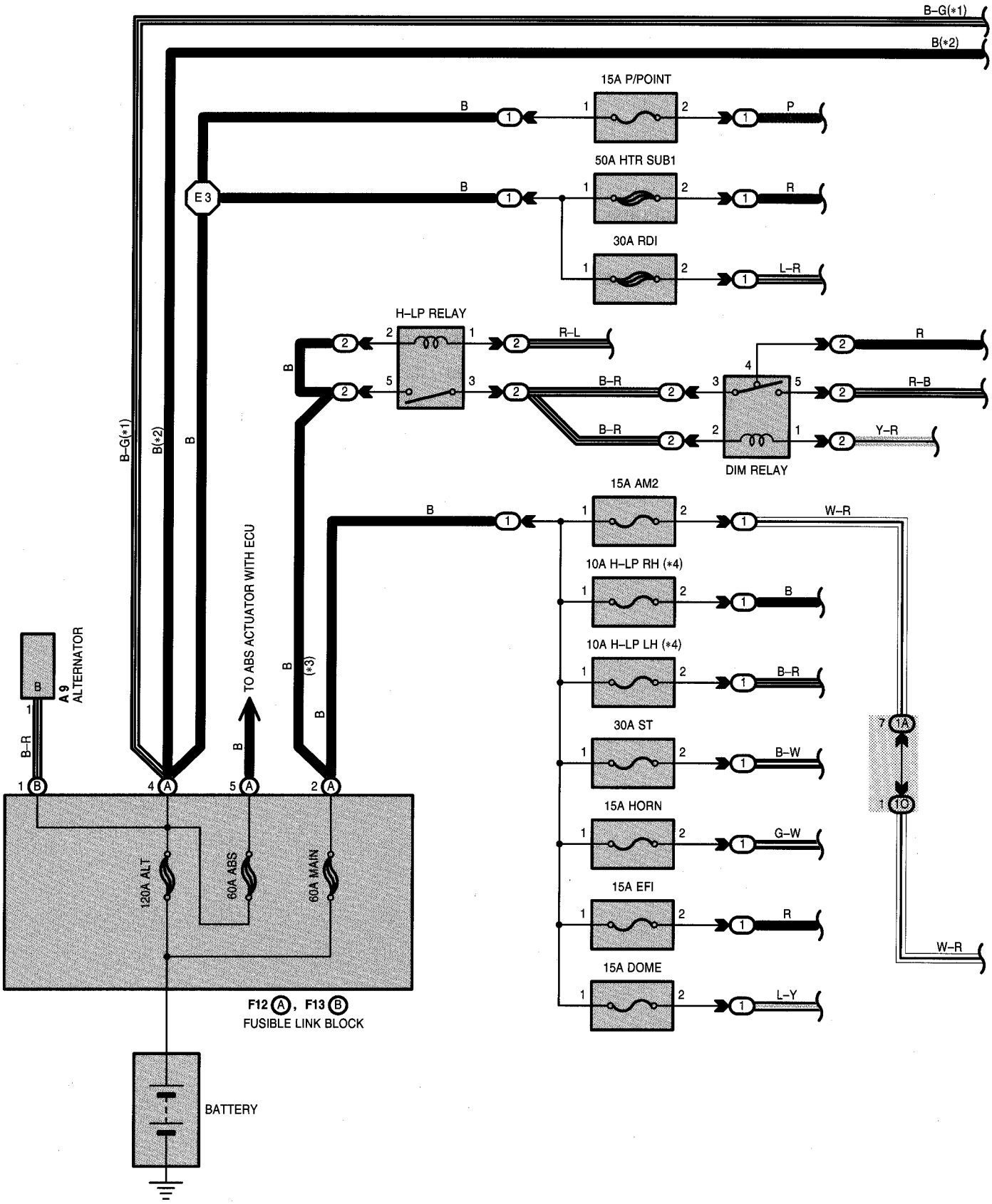

* 1 : COLD AREA SPEC.
* 2 : EXCEPT COLD AREA SPEC.
* 3 : W/ DAYTIME RUNNING LIGHT
* 4 : W/O DAYTIME RUNNING LIGHT

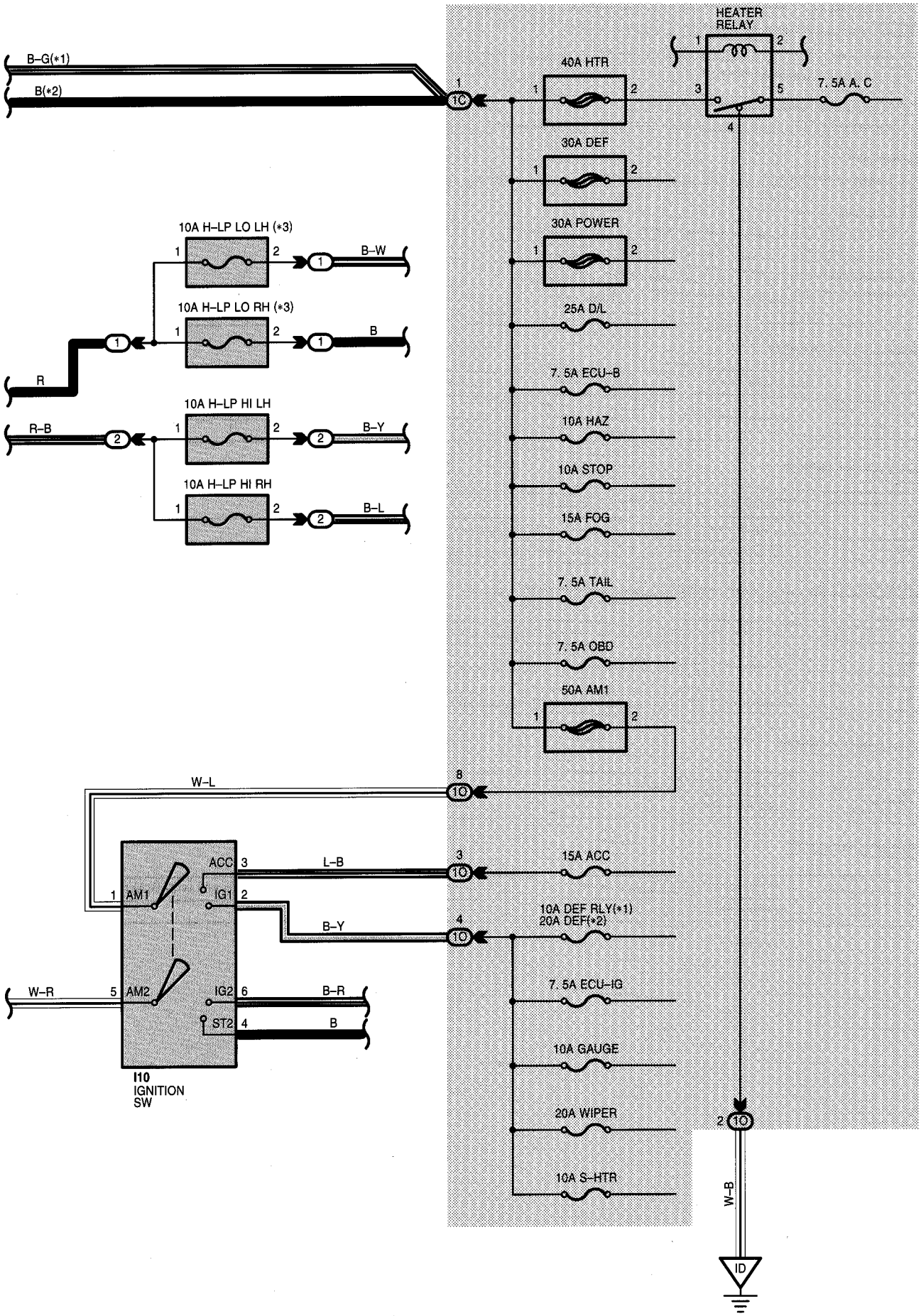

POWER SOURCE (LHD)

SERVICE HINTS

H-LP RELAY (w/ DAYTIME RUNNING LIGHT)

3-5 : Closed with the light control SW at **HEAD** position or the dimmer SW at **FLASH** position
: Closed with the engine running

DIM RELAY (w/ DAYTIME RUNNING LIGHT)

3-5 : Closed with the light control SW at **HEAD** position and dimmer SW at **HIGH** position or **FLASH** position

HEATER RELAY

3-5 : Closed with the blower SW at except **OFF** position (Blower SW on)

I10 IGNITION SW

1-3 : Closed with the ignition SW at **ACC** or **ON** position
1-2 : Closed with the ignition SW at **ON** or **ST** position
5-6 : Closed with the ignition SW at **ON** or **ST** position
5-4 : Closed with the ignition SW at **ST** position

: PARTS LOCATION

Code	See Page	Code	See Page	Code	See Page
A9	84 (LHD)	F13 B	84 (LHD)		
F12 A	84 (LHD)	I10	87 (LHD)		

: RELAY BLOCKS

Code	See Page	Relay Blocks (Relay Block Location)
1	78	Engine Room R/B No.1 (Engine Compartment Left)
2	79	Engine Room R/B No.2 (Engine Compartment Left)

: JUNCTION BLOCK AND WIRE HARNESS CONNECTOR

Code	See Page	Junction Block and Wire Harness (Connector Location)
1A	80	Engine Room Main Wire and Instrument Panel J/B (Lower Finish Panel)
1C		
1O	81	Instrument Panel Wire and Instrument Panel J/B (Lower Finish Panel)

: GROUND POINTS

Code	See Page	Ground Points Location
ID	98 (LHD)	Left Kick Panel

: SPLICE POINTS

Code	See Page	Wire Harness with Splice Points	Code	See Page	Wire Harness with Splice Points
E3	96 (LHD)	Engine Room Main Wire			

POWER SOURCE (RHD)

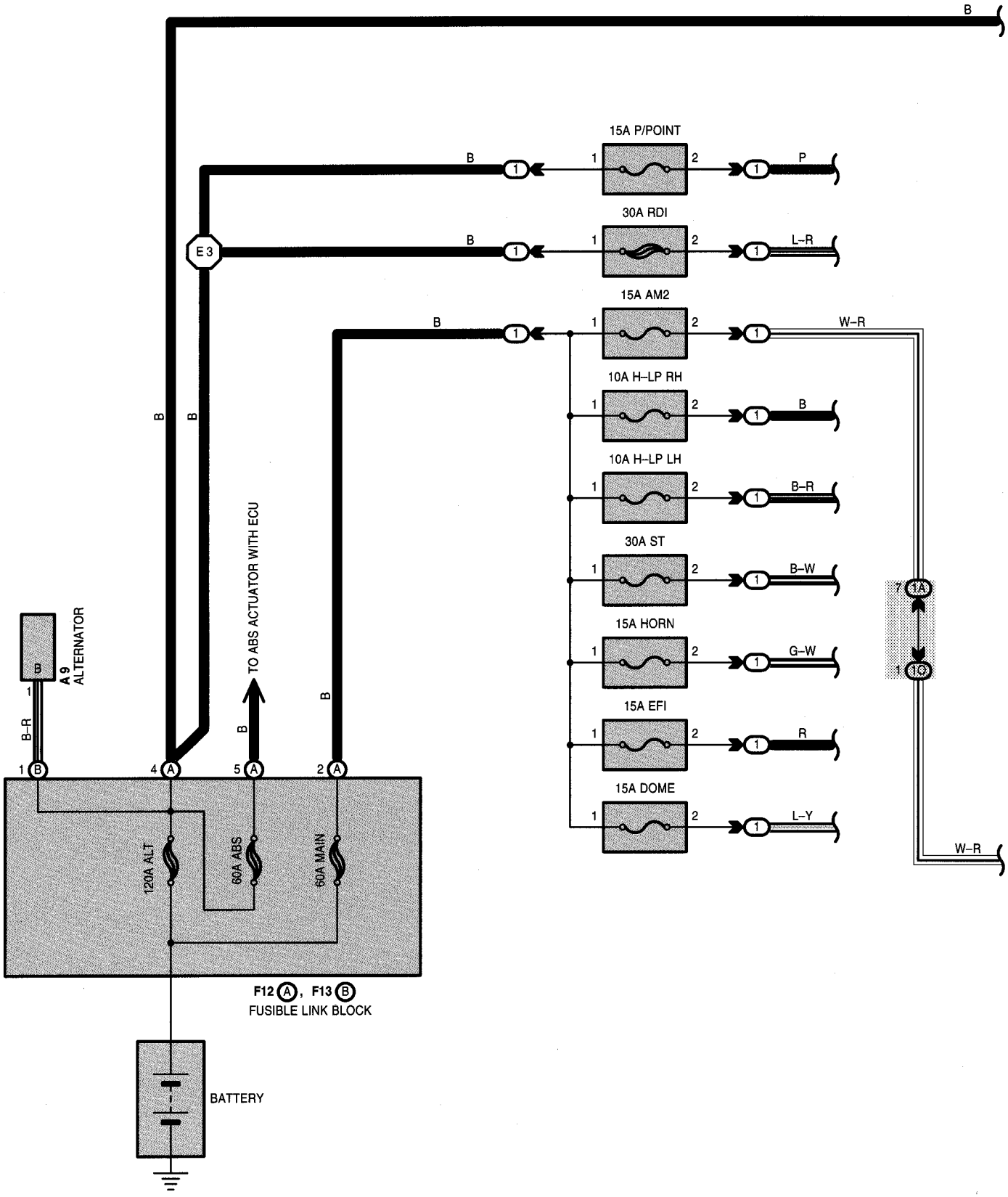

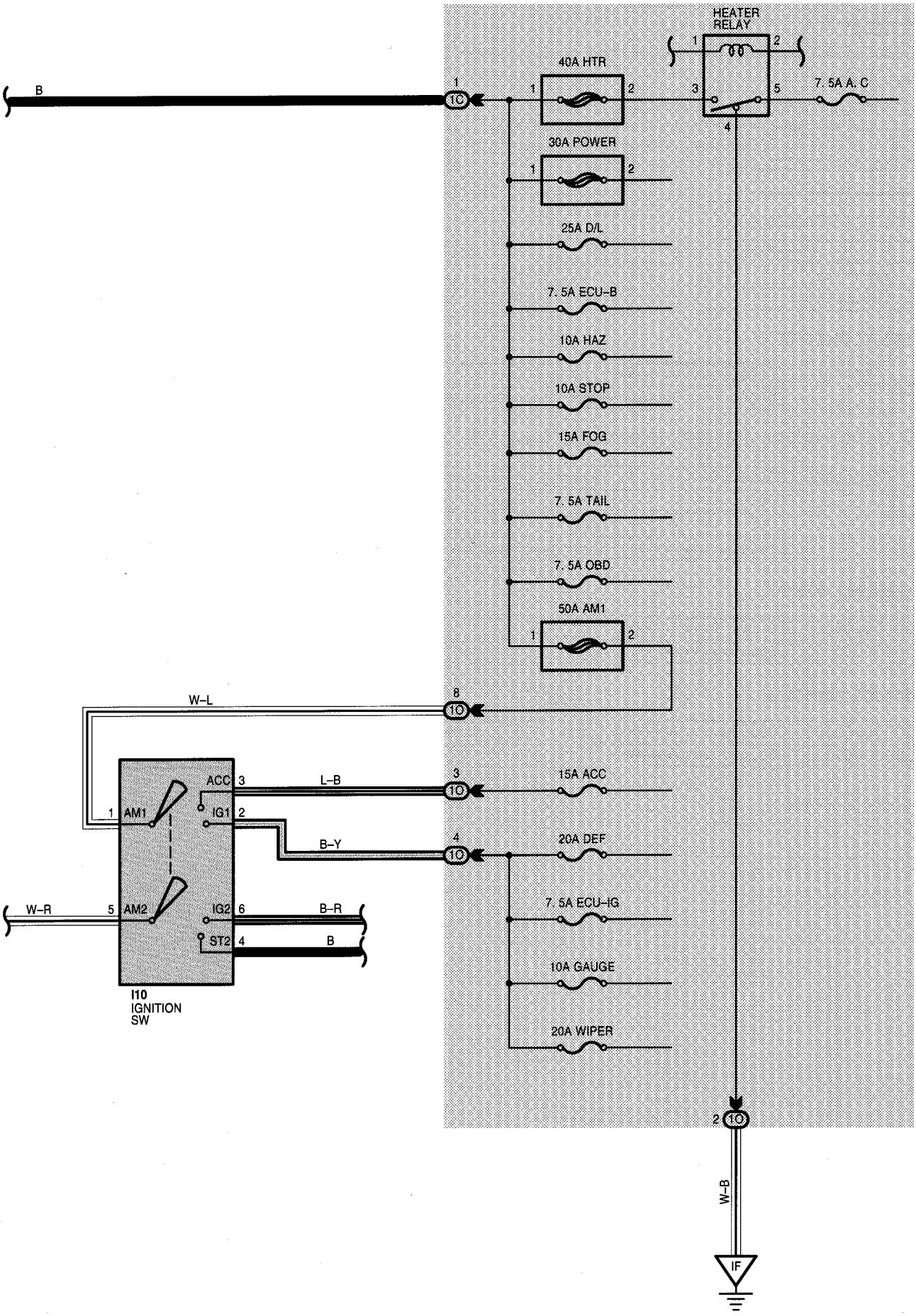
HEATER RELAY
40A HTR
7. 5A A. C
30A POWER
25A D/L
7. 5A ECU-B
10A HAZ
10A STOP
15A FOG
7. 5A TAIL
7. 5A OBD
50A AM1
W-L
ACC
L-B
15A ACC
AM1
IG1
B-Y
20A DEF
W-R
AM2
IG2
B-R
7. 5A ECU-IG
ST2
B
10A GAUGE
20A WIPER
I10
IGNITION
SW
W-B
IF

POWER SOURCE (RHD)

SERVICE HINTS

HEATER RELAY

3–5 : Closed with the blower SW at except **OFF** position (Blower SW on)

I10 IGNITION SW

1–3 : Closed with the ignition SW at **ACC** or **ON** position
1–2 : Closed with the ignition SW at **ON** or **ST** position
5–6 : Closed with the ignition SW at **ON** or **ST** position
5–4 : Closed with the ignition SW at **ST** position

: PARTS LOCATION

Code		See Page	Code		See Page	Code	See Page
A9		90 (RHD)	F13	B	90 (RHD)		
F12	A	90 (RHD)	I10		93 (RHD)		

: RELAY BLOCKS

Code	See Page	Relay Blocks (Relay Block Location)
1	78	Engine Room R/B No.1 (Engine Compartment Left)

: JUNCTION BLOCK AND WIRE HARNESS CONNECTOR

Code	See Page	Junction Block and Wire Harness (Connector Location)
1A	80	Engine Room Main Wire and Instrument Panel J/B (Lower Finish Panel)
1C		
1O	81	Instrument Panel Wire and Instrument Panel J/B (Lower Finish Panel)

: GROUND POINTS

Code	See Page	Ground Points Location
IF	106 (RHD)	Right Kick Panel

: SPLICE POINTS

Code	See Page	Wire Harness with Splice Points	Code	See Page	Wire Harness with Splice Points
E3	104 (RHD)	Engine Room Main Wire			

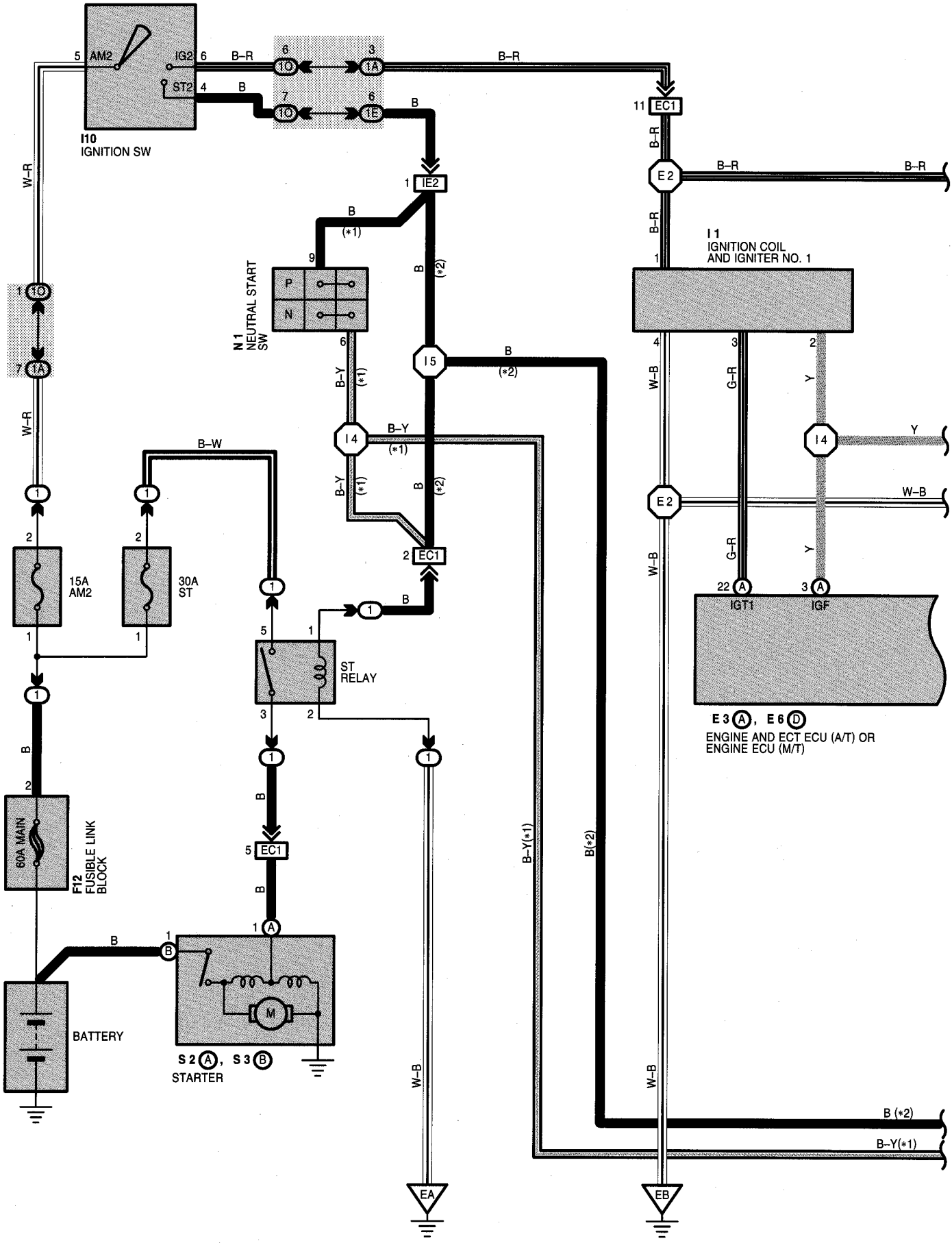
I10
IGNITION SW
AM2
IG2
ST2
B-R
B
W-R
1O
1A
1E
IE2
EC1
E2
N1
NEUTRAL START SW
P
N
B-Y
(*1)
(*2)
I5
I4
B-W
15A
AM2
30A
ST
ST
RELAY
60A MAIN
F12
FUSIBLE LINK BLOCK
BATTERY
S2 A, S3 B
STARTER
M
W-B
EA
I1
IGNITION COIL
AND IGNITER NO. 1
G-R
Y
IGT1
IGF
E3 A, E6 D
ENGINE AND ECT ECU (A/T) OR
ENGINE ECU (M/T)
B-Y(*1)
B(*2)
EB

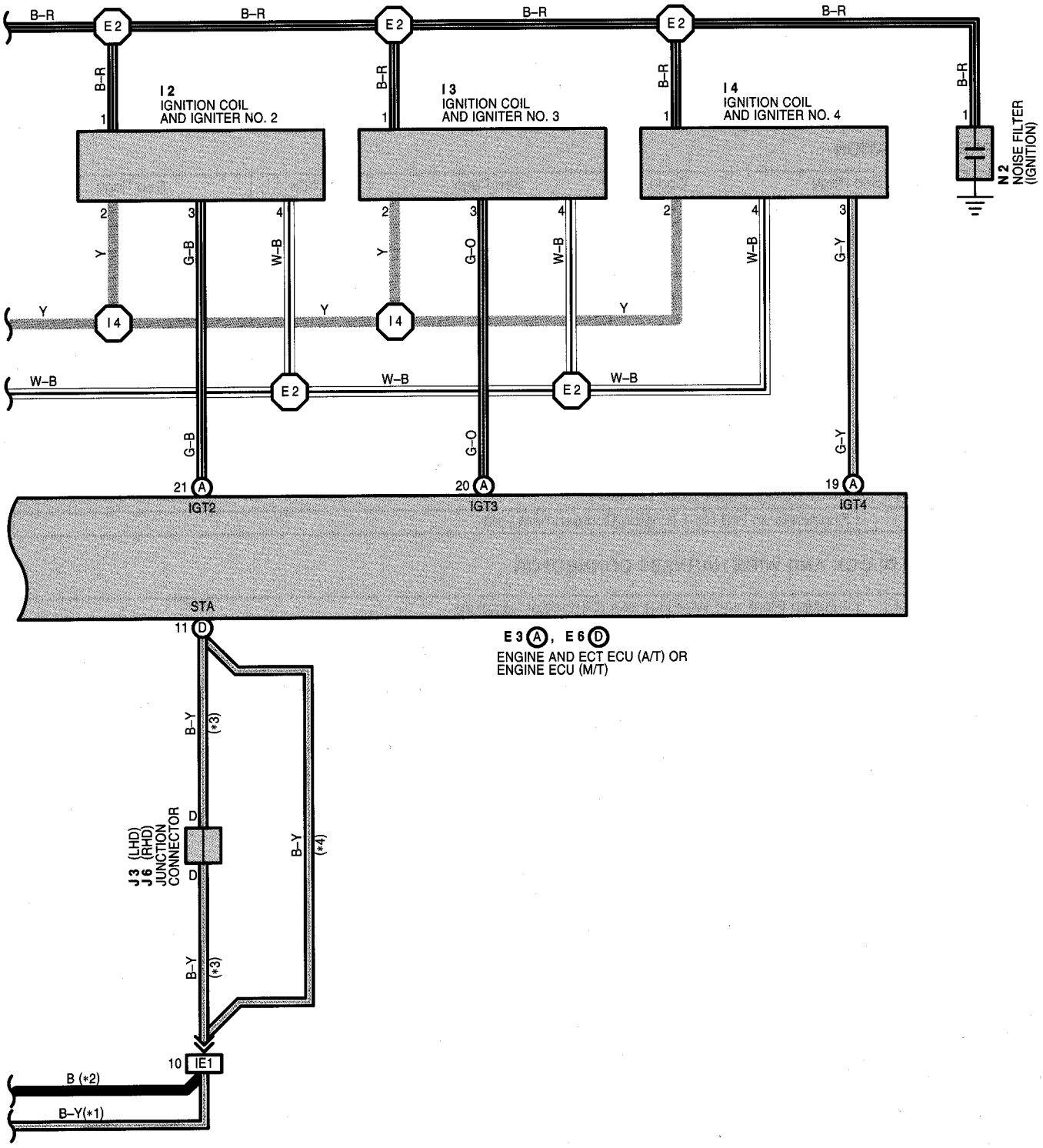
B–R
E 2
I 2
IGNITION COIL
AND IGNITER NO. 2
I 3
IGNITION COIL
AND IGNITER NO. 3
I 4
IGNITION COIL
AND IGNITER NO. 4
N 2
NOISE FILTER
(IGNITION)
Y
G–B
W–B
G–O
G–Y
I 4
21 A
IGT2
20 A
IGT3
19 A
IGT4
STA
11 D
E 3 A, E 6 D
ENGINE AND ECT ECU (A/T) OR
ENGINE ECU (M/T)
B–Y
(*3)
(*4)
J3 (LHD)
J6 (RHD)
JUNCTION
CONNECTOR
D
10 IE1
B (*2)
B–Y(*1)

STARTING AND IGNITION

SERVICE HINTS

S2 (A), S3 (B) STARTER

Point closed with the neutral start SW at **P** or **N** position and the ignition SW at **ST** position (A/T)
Point closed with the ignition SW at **ST** position (M/T)

I10 IGNITION SW

5–6 : Closed with the ignition SW at **ON** or **ST** position
5–4 : Closed with the ignition SW at **ST** position

N1 NEUTRAL START SW

9–6 : Closed with the shift lever in **P** or **N** position

ST RELAY

5–3 : Closed with the neutral start SW at **P** or **N** position and the ignition SW at **ST** position (A/T)
5–3 : Closed with the ignition SW at **ST** position (M/T)

○ : PARTS LOCATION

Code		See Page	Code	See Page	Code		See Page
E3	A	86 (LHD)	I2	91 (RHD)	J6		93 (RHD)
		92 (RHD)	I3	85 (LHD)	N1		85 (LHD)
E6	D	86 (LHD)		91 (RHD)			91 (RHD)
		92 (RHD)	I4	85 (LHD)	N2		85 (LHD)
F12		84 (LHD)		91 (RHD)			91 (RHD)
		90 (RHD)	I10	87 (LHD)	S2	A	85 (LHD)
I1		85 (LHD)		93 (RHD)			91 (RHD)
		91 (RHD)	J3	87 (LHD)	S3	B	85 (LHD)
I2		85 (LHD)	J6	87 (LHD)			91 (RHD)

▭ : RELAY BLOCKS

Code	See Page	Relay Blocks (Relay Block Location)
1	78	Engine Room R/B No.1 (Engine Compartment Left)

▭ : JUNCTION BLOCK AND WIRE HARNESS CONNECTOR

Code	See Page	Junction Block and Wire Harness (Connector Location)
1A	80	Engine Room Main Wire and Instrument Panel J/B (Lower Finish Panel)
1E	81	Instrument Panel Wire and Instrument Panel J/B (Lower Finish Panel)
1O		

▭ : CONNECTOR JOINING WIRE HARNESS AND WIRE HARNESS

Code	See Page	Joining Wire Harness and Wire Harness (Connector Location)
EC1	96 (LHD)	Engine Wire and Engine Room Main Wire (Inside of Engine Room R/B No.1)
	104 (RHD)	
IE1	100 (LHD)	Engine Wire and Instrument Panel Wire (Behind the Glove Box)
	108 (RHD)	
IE2	100 (LHD)	
	108 (RHD)	

▽ : GROUND POINTS

Code	See Page	Ground Points Location
EA	96 (LHD)	Front Right Fender Apron
	104 (RHD)	
EB	96 (LHD)	Engine Block
	104 (RHD)	

: SPLICE POINTS

Code	See Page	Wire Harness with Splice Points	Code	See Page	Wire Harness with Splice Points
E2	96 (LHD)	Engine Wire	I4	108 (RHD)	Engine Wire
	104 (RHD)		I5	100 (LHD)	
I4	100 (LHD)			108 (RHD)	

CHARGING

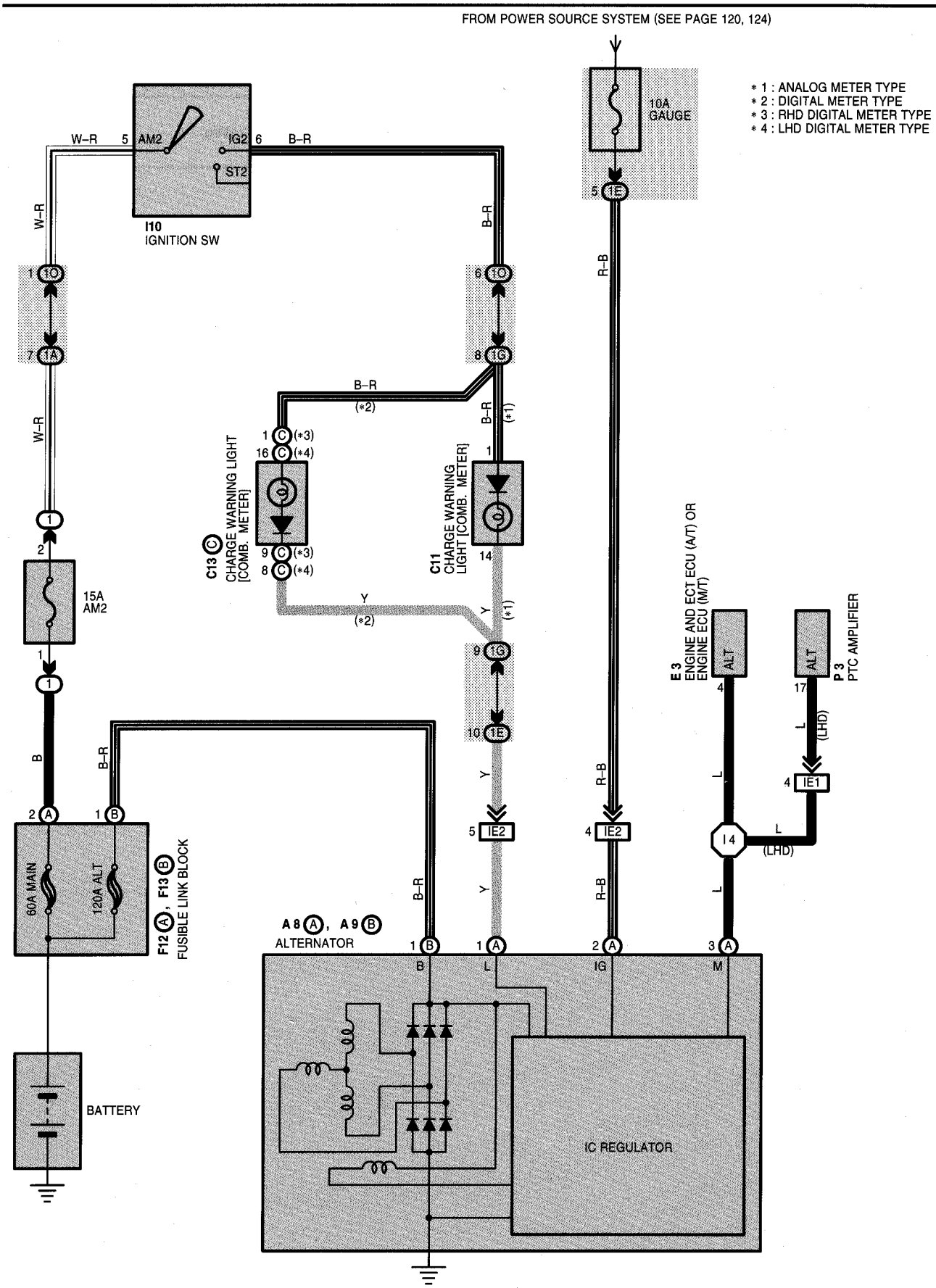
FROM POWER SOURCE SYSTEM (SEE PAGE 120, 124)
* 1 : ANALOG METER TYPE
* 2 : DIGITAL METER TYPE
* 3 : RHD DIGITAL METER TYPE
* 4 : LHD DIGITAL METER TYPE
10A GAUGE
I10 IGNITION SW
AM2
IG2
ST2
W–R
B–R
R–B
15A AM2
C13 CHARGE WARNING LIGHT [COMB. METER]
C11 CHARGE WARNING LIGHT [COMB. METER]
E3 ENGINE AND ECT ECU (A/T) OR ENGINE ECU (M/T)
P3 PTC AMPLIFIER
ALT
I4
IE1
IE2
(LHD)
60A MAIN
120A ALT
F12 A, F13 B FUSIBLE LINK BLOCK
A8 A, A9 B ALTERNATOR
BATTERY
IC REGULATOR

SERVICE HINTS

A8 (A), A9 (B) ALTERNATOR

(B) 1-GROUND : **13.8-14.4** volts with the engine running at **5000** rpm and **25**°C (**77**°F)

(A) 1-GROUND : Below **1.5** volts with the ignition SW at **ON** position and the engine not running

: PARTS LOCATION

Code		See Page	Code		See Page	Code		See Page
A8	A	84 (LHD)	C13	C	86 (LHD)	F13	B	84 (LHD)
		90 (RHD)			92 (RHD)			90 (RHD)
A9	B	84 (LHD)	E3		86 (LHD)	I10		87 (LHD)
		90 (RHD)			92 (RHD)			93 (RHD)
C11		86 (LHD)	F12	A	84 (LHD)	P3		87 (LHD)
		92 (RHD)			90 (RHD)			

: RELAY BLOCKS

Code	See Page	Relay Blocks (Relay Block Location)
1	78	Engine Room R/B No.1 (Engine Compartment Left)

: JUNCTION BLOCK AND WIRE HARNESS CONNECTOR

Code	See Page	Junction Block and Wire Harness (Connector Location)
1A	80	Engine Room Main Wire and Instrument Panel J/B (Lower Finish Panel)
1E	81	Instrument Panel Wire and Instrument Panel J/B (Lower Finish Panel)
1G		
1O		

: CONNECTOR JOINING WIRE HARNESS AND WIRE HARNESS

Code	See Page	Joining Wire Harness and Wire Harness (Connector Location)
IE1	100 (LHD)	Engine Wire and Instrument Panel Wire (Behind the Glove Box)
	108 (RHD)	
IE2	100 (LHD)	
	108 (RHD)	

: SPLICE POINTS

Code	See Page	Wire Harness with Splice Points	Code	See Page	Wire Harness with Splice Points
I4	100 (LHD)	Engine Wire	I4	108 (RHD)	Engine Wire

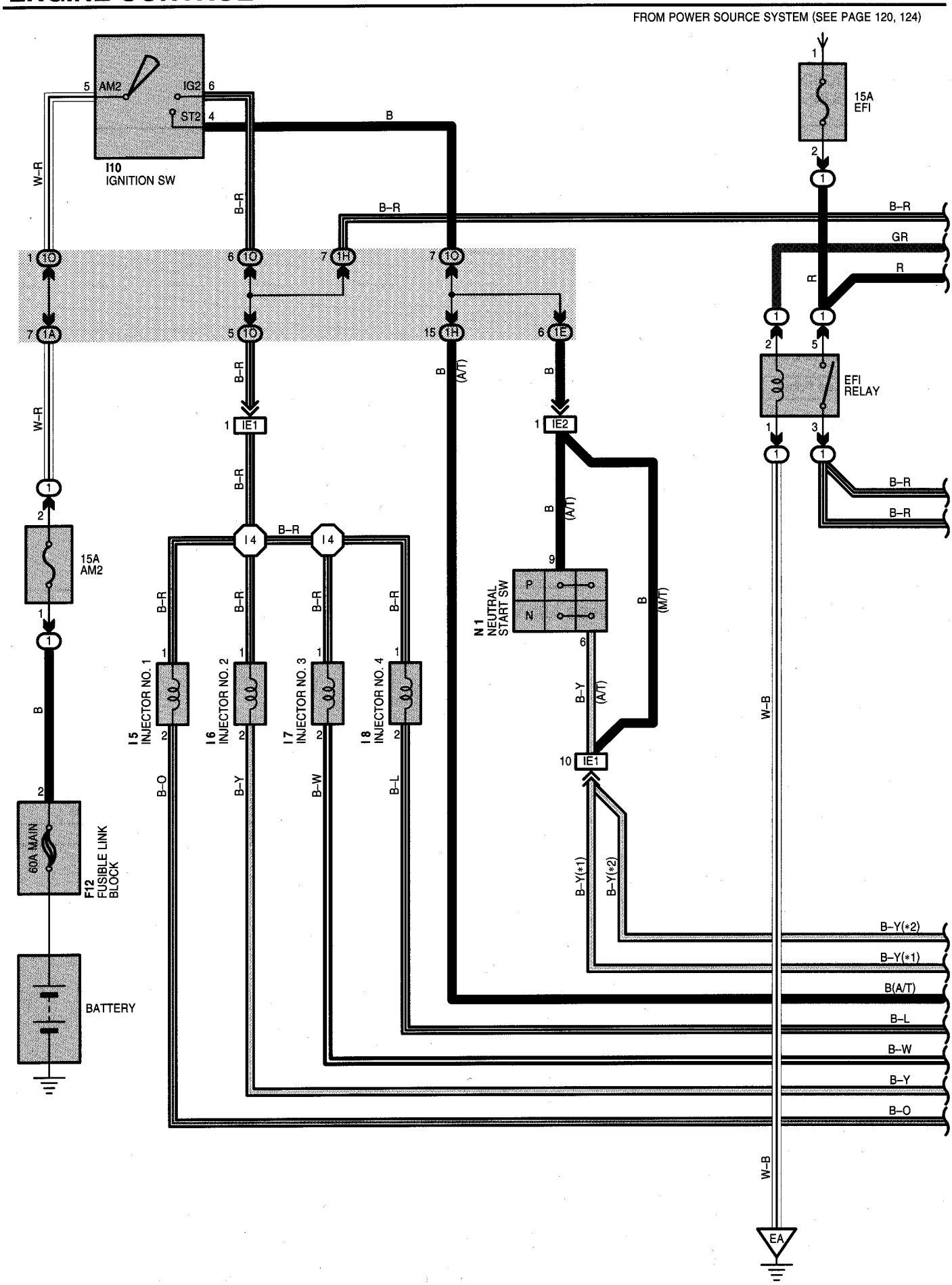
FROM POWER SOURCE SYSTEM (SEE PAGE 120, 124)
I10
IGNITION SW
AM2
IG2
ST2
15A
EFI
EFI
RELAY
15A
AM2
60A MAIN
F12
FUSIBLE LINK
BLOCK
BATTERY
I5
INJECTOR NO. 1
I6
INJECTOR NO. 2
I7
INJECTOR NO. 3
I8
INJECTOR NO. 4
N1
NEUTRAL
START SW
P
N
IE1
IE2
I4
EA
B
B–R
W–R
GR
R
B(A/T)
B(M/T)
B–Y
B–O
B–L
B–W
W–B
B–Y(*1)
B–Y(*2)

* 1 : ANALOG METER TYPE
* 2 : DIGITAL METER TYPE

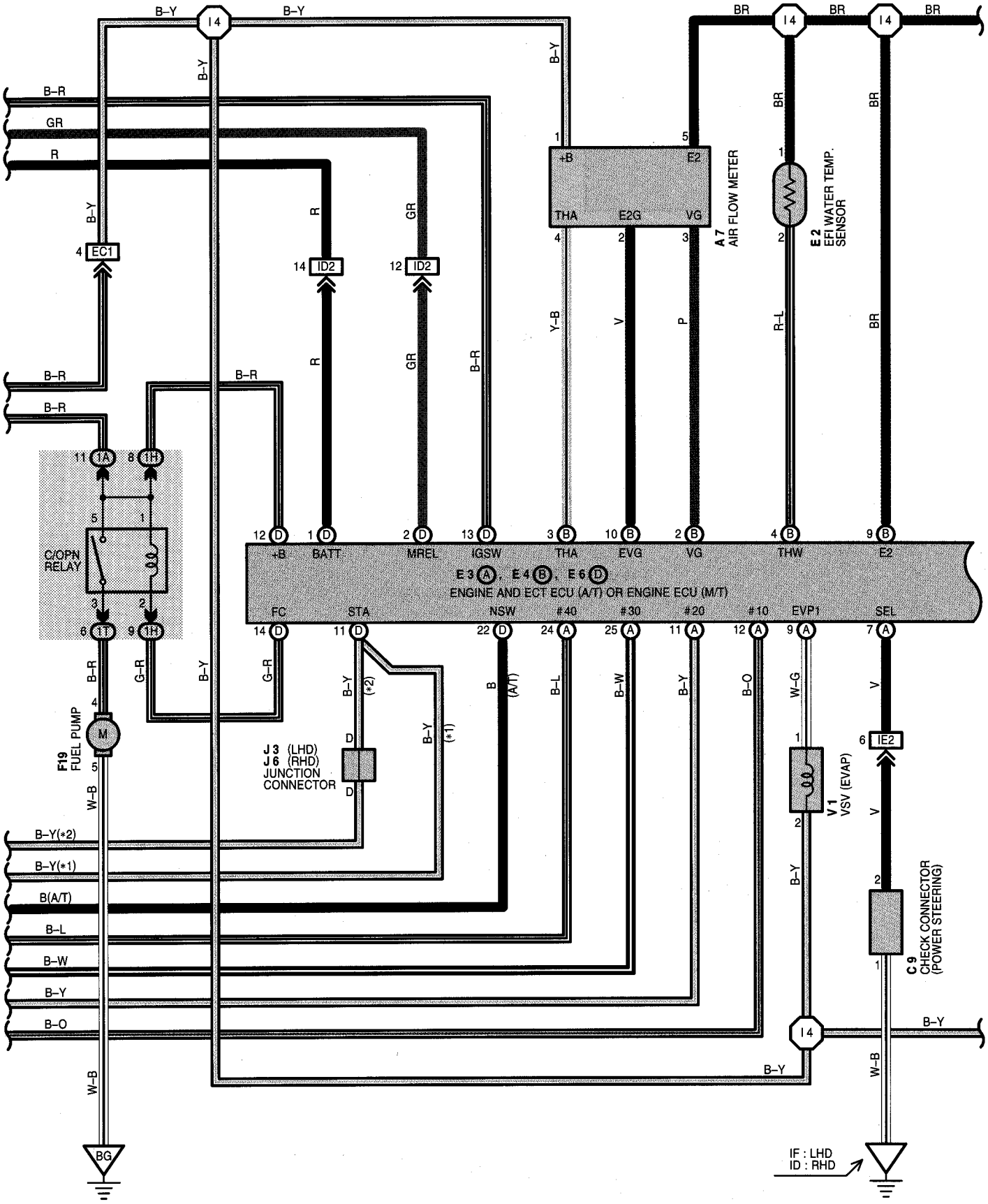

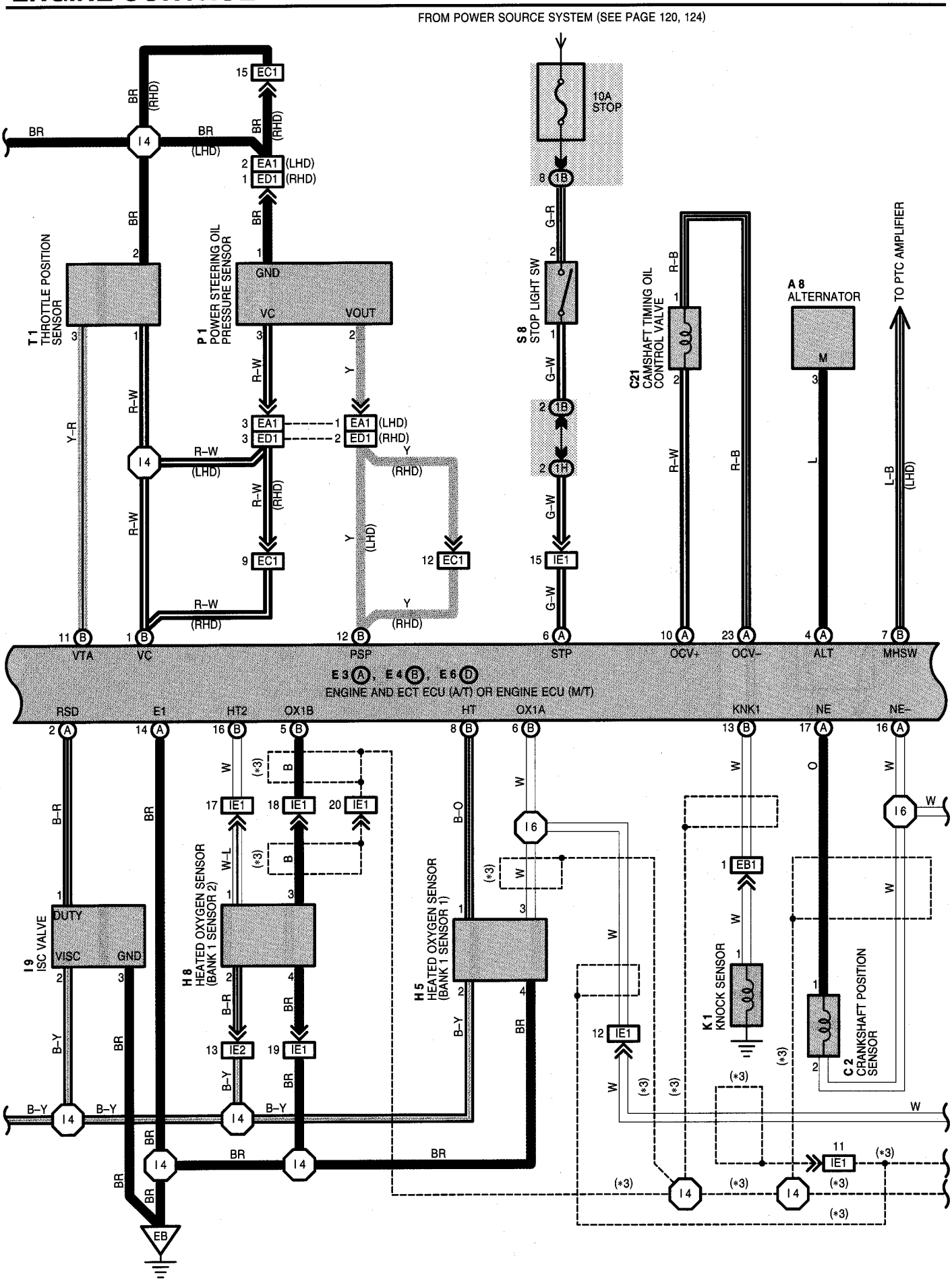
FROM POWER SOURCE SYSTEM (SEE PAGE 120, 124)
10A STOP
T1 THROTTLE POSITION SENSOR
P1 POWER STEERING OIL PRESSURE SENSOR
S8 STOP LIGHT SW
C21 CAMSHAFT TIMING OIL CONTROL VALVE
A8 ALTERNATOR
TO PTC AMPLIFIER
E3 (A), E4 (B), E6 (D)
ENGINE AND ECT ECU (A/T) OR ENGINE ECU (M/T)
VTA
VC
PSP
STP
OCV+
OCV–
ALT
MHSW
RSD
E1
HT2
OX1B
HT
OX1A
KNK1
NE
NE–
I9 ISC VALVE
H8 HEATED OXYGEN SENSOR (BANK 1 SENSOR 2)
H5 HEATED OXYGEN SENSOR (BANK 1 SENSOR 1)
K1 KNOCK SENSOR
C2 CRANKSHAFT POSITION SENSOR
EB

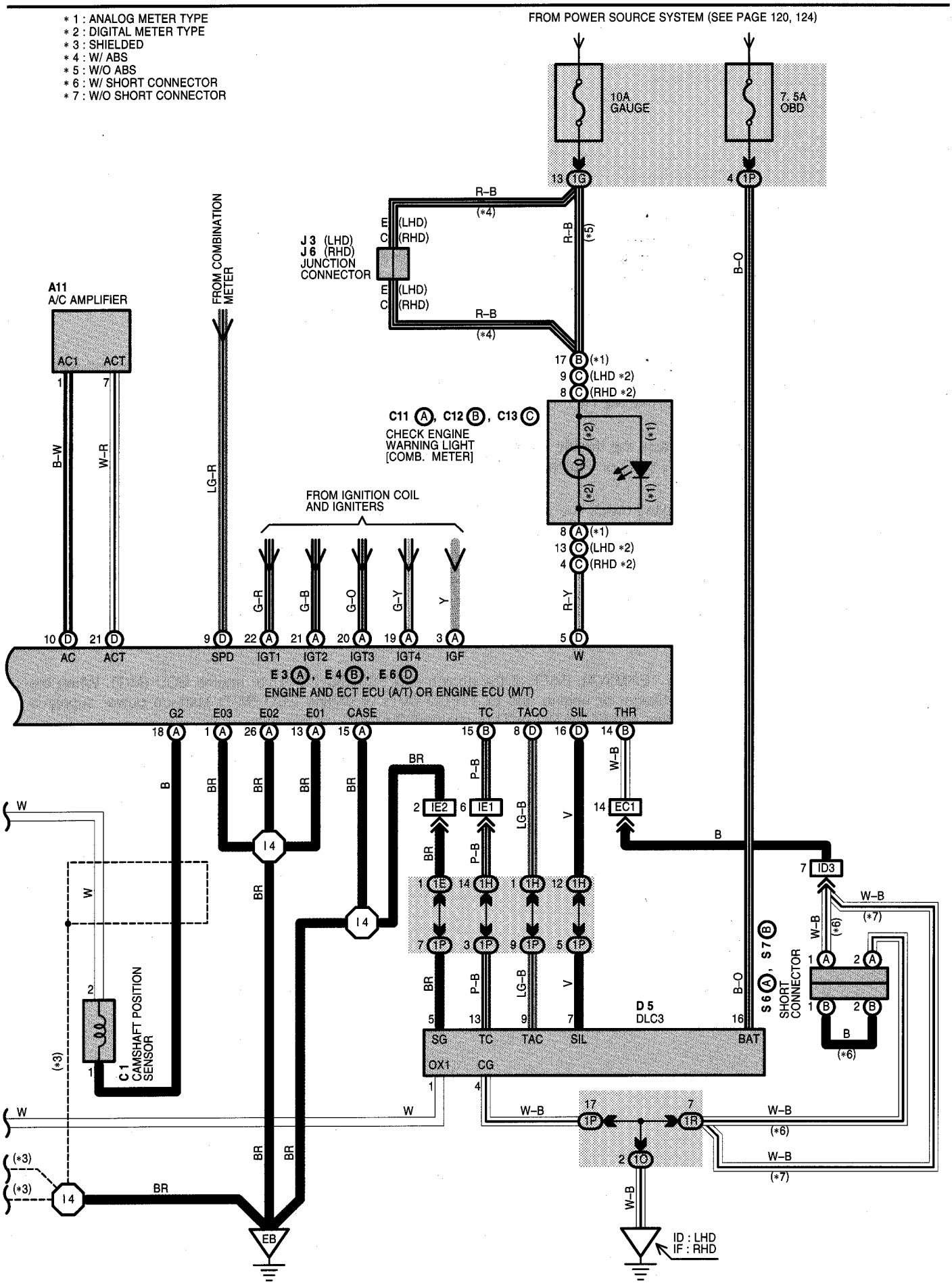
* 1 : ANALOG METER TYPE
* 2 : DIGITAL METER TYPE
* 3 : SHIELDED
* 4 : W/ ABS
* 5 : W/O ABS
* 6 : W/ SHORT CONNECTOR
* 7 : W/O SHORT CONNECTOR
FROM POWER SOURCE SYSTEM (SEE PAGE 120, 124)
10A GAUGE
7.5A OBD
J3 (LHD)
J6 (RHD)
JUNCTION CONNECTOR
A11
A/C AMPLIFIER
FROM COMBINATION METER
C11 A, C12 B, C13 C
CHECK ENGINE WARNING LIGHT [COMB. METER]
FROM IGNITION COIL AND IGNITERS
E3 A, E4 B, E6 D
ENGINE AND ECT ECU (A/T) OR ENGINE ECU (M/T)
C1
CAMSHAFT POSITION SENSOR
D5
DLC3
S6 A, S7 B
SHORT CONNECTOR
ID : LHD
IF : RHD

SYSTEM OUTLINE

This system utilizes an engine control module and maintains overall control of the engine, transmission and so on. An outline of the engine control is explained here.

1. INPUT SIGNALS

(1) Water temp. signal circuit
The EFI water temp. sensor detects the engine coolant temp. and has a built-in thermistor with a resistance which varies according to the engine coolant temp. thus the engine coolant temp. is input in the form of a control signal into TERMINAL THW of the engine and ECT ECU (A/T) or engine ECU (M/T).

(2) Intake air temp. signal circuit
The intake air temp. sensor is installed in the air flow meter and detects the intake air temp., which is input as a control signal into TERMINAL THA of the engine and ECT ECU (A/T) or engine ECU (M/T).

(3) Oxygen sensor signal circuit
The oxygen density in the exhaust gases is detected and input as a control signal into TERMINALS OX1A and OX1B of the engine and ECT ECU (A/T) or engine ECU (M/T).

(4) RPM signal circuit
Camshaft position and crankshaft position are detected by the camshaft position sensor and crankshaft position sensor. Camshaft position is input as a control signal to TERMINAL G2 of the engine and ECT ECU (A/T) or engine ECU (M/T), and engine RPM is input into TERMINAL NE.

(5) Throttle signal circuit
The throttle position sensor detects the throttle valve opening angle, which is input as a control signal into TERMINAL VTA of the engine and ECT ECU (A/T) or engine ECU (M/T).

(6) Vehicle speed signal circuit
The vehicle speed sensor, installed inside the transmission, detects the vehicle speed and inputs a control signal into TERMINAL SPD of the engine and ECT ECU (A/T) or engine ECU (M/T).

(7) Neutral start SW signal circuit (A/T)
The Neutral start SW detects whether the shift position are in neutral, parking or not, and inputs a control signal into TERMINAL STA of the engine and ECT ECU.

(8) A/C SW signal circuit
The A/C amplifier inputs the A/C operations into TERMINAL AC of the engine and ECT ECU (A/T) or engine ECU (M/T).

(9) Battery signal circuit
Voltage is constantly applied to TERMINAL BATT of the engine and ECT ECU (A/T) or engine ECU (M/T). When the ignition SW is turned on, the voltage for engine and ECT ECU (A/T) or engine ECU (M/T) start-up power supply is applied to TERMINAL +B of engine and ECT ECU (A/T) or engine ECU (M/T) via EFI relay.

(10) Starter signal circuit (A/T)
To confirm whether the engine is cranking, the voltage applied to the starter motor during cranking is detected and the signal is input into TERMINAL NSW of the engine and ECT ECU as a control signal.

(11) Engine knock signal circuit
Engine knocking is detected by knock sensor and the signal is input into TERMINAL KNK1 as a control signal.

2. CONTROL SYSTEM

* EFI system
The EFI system monitors the engine condition through the signals, which are input from each sensor (Input signals from (1) to (11) etc.) to the engine and ECT ECU (A/T) or engine ECU (M/T). The best fuel injection volume is decided based on this data and the program memorized by the engine and ECT ECU (A/T) or engine ECU (M/T), and the control signal is output to TERMINALS #10, #20, #30 and #40 of the engine and ECT ECU (A/T) or engine ECU (M/T) to operate the injector. (Inject the fuel). The EFI system produces control of fuel injection operation by the engine and ECT ECU (A/T) or engine ECU (M/T) in response to the driving conditions.

* ESA system
The ESA system monitors the engine condition through the signals, which are input to the engine and ECT ECU (A/T) or engine ECU (M/T) from each sensor (Input signals from (1), (2), (4) to (11) etc.) the best ignition timing is detected according to this data and the memorized data in the engine and ECT ECU (A/T) or engine ECU (M/T), and the control signal is output to TERMINALS IGT1, IGT2, IGT3 and IGT4. This signal controls the igniter to provide the best ignition timing for the driving conditions.

* ISC system
The ISC system (Rotary solenoid type) increases the RPM and provides idling stability for fast idle-up when the engine is cold and when the idle speed has dropped due to electrical load, etc. The engine and ECT ECU (A/T) or engine ECU (M/T) evaluates the signals from each sensor (Input signals (1), (4) to (8), (11) etc.), outputs current to TERMINAL RSD, and controls the ISC valve.

* Fuel pump control system
The engine and ECT ECU (A/T) or engine ECU (M/T) operation outputs to TERMINAL FC and controls the C/OPN relay. Thus controls the fuel pump drive speed in response to conditions.

3. DIAGNOSIS SYSTEM

With the diagnosis system, when there is a malfunctioning in the engine and ECT ECU (A/T) or engine ECU (M/T) signal system, the malfunction system is recorded in the memory. The malfunctioning system can then be found by reading the display (Code) of the malfunction indicator lamp.

4. FAIL-SAFE SYSTEM

When a malfunction occurs in any system, if there is a possibility of engine trouble being caused by continued control based on the signals from that system, the fail-safe system either controls the system by using data (Standard values) recorded in the engine and ECT ECU (A/T) or engine ECU (M/T) memory or else stops the engine.

SERVICE HINTS

E3(A), E4 (B), E6 (D) ENGINE AND ECT ECU (A/T) OR ENGINE ECU (M/T)

BATT-E1 : Always approx. **9-14** volts
+B-E1 : **9-14** volts (Ignition SW on)
VC-E2 : Always **4.5-5.5** volts (Ignition SW on)
VTA-E2 : **0.3-1.0** volts (Ignition SW on and throttle valve fully closed)
3.2-4.9 volts (Ignition SW on and throttle valve fully open)
THW-E2 : **0.2-1.0** volts (Engine idling and EFI water temp. **80**°C)
THA-E2 : **0.5-3.4** volts (Engine idling and intake air temp. **20**°C)
G2-NE- : Pulse generation (Engine idling)
NE-NE- : Pulse generation (Engine idling)
W-E1 : Below **3.0** volts
#10, #20, #30, #40-E01 : **9-14** volts (Ignition SW on)
IGT1, IGT2, IGT3, IGT4-E1 : Pulse generation (Engine cranking or idling)

ENGINE CONTROL

○ : PARTS LOCATION

Code	See Page
A7	84 (LHD)
	90 (RHD)
A8	84 (LHD)
	90 (RHD)
A11	86 (LHD)
	92 (RHD)
C1	84 (LHD)
	90 (RHD)
C2	84 (LHD)
	90 (RHD)
C9	86 (LHD)
	92 (RHD)
C11	86 (LHD)
	92 (RHD)
C12 B	86 (LHD)
	92 (RHD)
C13 C	86 (LHD)
	92 (RHD)
C21	85 (LHD)
	91 (RHD)
D5	86 (LHD)
	92 (RHD)
E2	84 (LHD)

Code	See Page
E2	90 (RHD)
E3 A	86 (LHD)
	92 (RHD)
E4 B	86 (LHD)
	92 (RHD)
E6 D	86 (LHD)
	92 (RHD)
F12	84 (LHD)
	90 (RHD)
F19	88 (LHD)
	94 (RHD)
H5	85 (LHD)
	91 (RHD)
H8	87 (LHD)
	93 (RHD)
I5	85 (LHD)
	91 (RHD)
I6	85 (LHD)
	91 (RHD)
I7	85 (LHD)
	91 (RHD)
I8	85 (LHD)
	91 (RHD)

Code	See Page
I9	85 (LHD)
	91 (RHD)
I10	87 (LHD)
	93 (RHD)
J3	87 (LHD)
J6	87 (LHD)
	93 (RHD)
K1	85 (LHD)
	91 (RHD)
N1	85 (LHD)
	91 (RHD)
P1	85 (LHD)
	91 (RHD)
S6 A	87 (LHD)
	93 (RHD)
S7 B	87 (LHD)
	93 (RHD)
S8	87 (LHD)
	93 (RHD)
T1	85 (LHD)
	91 (RHD)
V1	85 (LHD)
	91 (RHD)

▭ : RELAY BLOCKS

Code	See Page	Relay Blocks (Relay Block Location)
1	78	Engine Room R/B No.1 (Engine Compartment Left)

▭ : JUNCTION BLOCK AND WIRE HARNESS CONNECTOR

Code	See Page	Junction Block and Wire Harness (Connector Location)
1A	80	Engine Room Main Wire and Instrument Panel J/B (Lower Finish Panel)
1B		
1E	81	Instrument Panel Wire and Instrument Panel J/B (Lower Finish Panel)
1G		
1H		
1O		
1P		
1R		
1T	80	Floor Wire and Instrument Panel J/B (Lower Finish Panel)

: CONNECTOR JOINING WIRE HARNESS AND WIRE HARNESS

Code	See Page	Joining Wire Harness and Wire Harness (Connector Location)
EA1	96 (LHD)	Engine Wire and Power Steering Sensor Wire (Front Right Fender Apron)
EB1	96 (LHD)	Engine Wire and Knock Sensor Wire (Near the Starter)
	104 (RHD)	
EC1	96 (LHD)	Engine Wire and Engine Room Main Wire (Inside of Engine Room R/B No.1)
	104 (RHD)	
ED1	104 (RHD)	Engine Room Main Wire and Power Steering Sensor Wire (Front Right Fender Apron)
ID2	100 (LHD)	Engine Room Main Wire and Instrument Panel Wire (Left Side of Instrument Panel)
	108 (RHD)	Engine Room Main Wire and Instrument Panel Wire (Right Side of Instrument Panel)
ID3	100 (LHD)	Engine Room Main Wire and Instrument Panel Wire (Left Side of Instrument Panel)
	108 (RHD)	Engine Room Main Wire and Instrument Panel Wire (Right Side of Instrument Panel)
IE1	100 (LHD)	Engine Wire and Instrument Panel Wire (Behind the Glove Box)
	108 (RHD)	
IE2	100 (LHD)	
	108 (RHD)	

: GROUND POINTS

Code	See Page	Ground Points Location
EA	96 (LHD)	Front Right Fender Apron
	104 (RHD)	
EB	96 (LHD)	Engine Block
	104 (RHD)	
ID	98 (LHD)	Left Kick Panel
	106 (RHD)	
IF	98 (LHD)	Right Kick Panel
	106 (RHD)	
BG	102 (LHD)	Left Rear Side Quarter Panel
	110 (RHD)	

: SPLICE POINTS

Code	See Page	Wire Harness with Splice Points	Code	See Page	Wire Harness with Splice Points
I4	100 (LHD)	Engine Wire	I6	100 (LHD)	Engine Wire
	108 (RHD)			108 (RHD)	

ENGINE IMMOBILISER SYSTEM

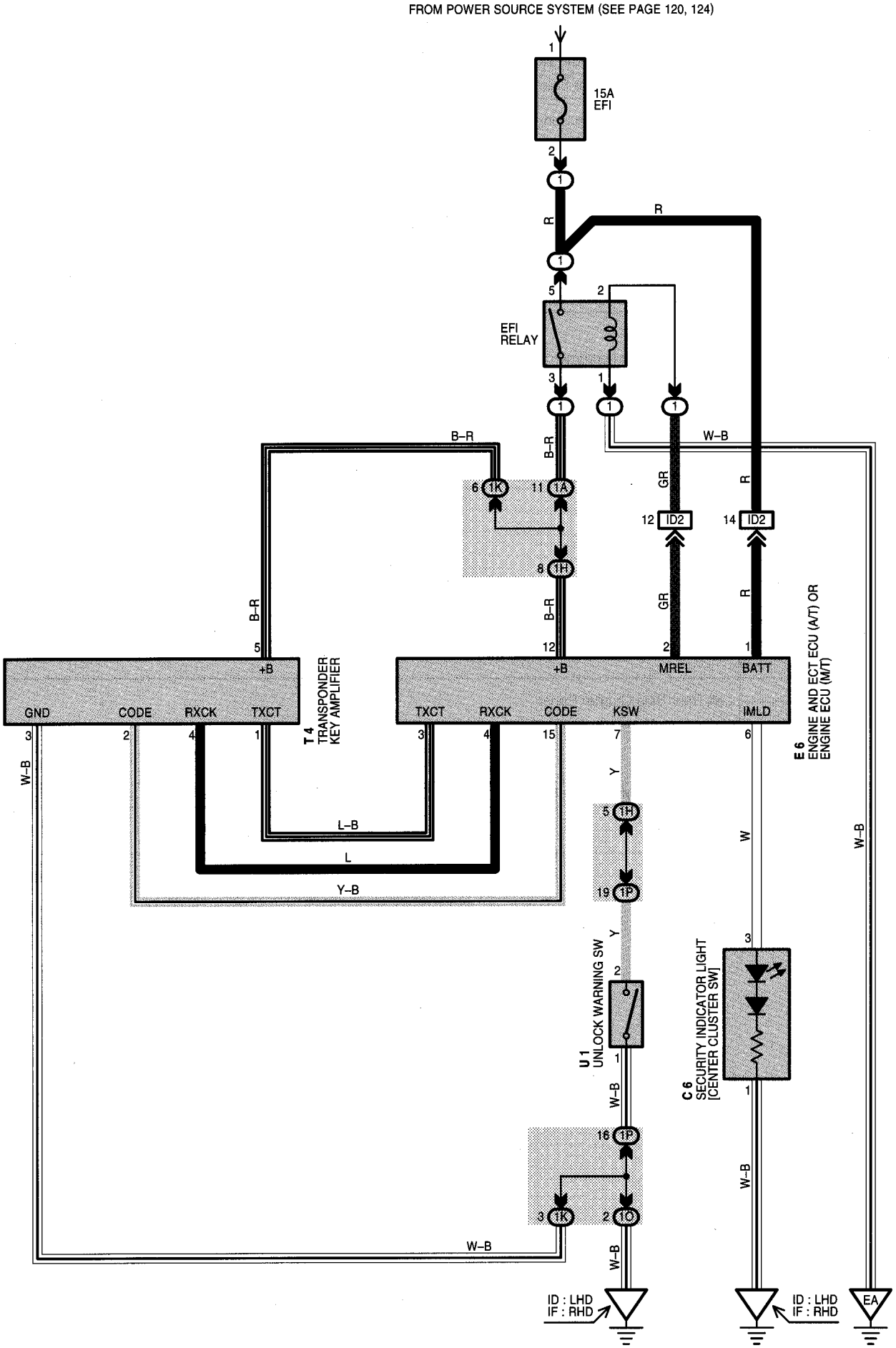

SERVICE HINTS

T4 TRANSPONDER KEY AMPLIFIER

3-GROUND : Always continuity

U1 UNLOCK WARNING SW

1-2 : Closed with the ignition key in cylinder

○ : PARTS LOCATION

Code	See Page	Code	See Page	Code	See Page
C6	86 (LHD)	E6	92 (RHD)	U1	87 (LHD)
	92 (RHD)	T4	87 (LHD)		93 (RHD)
E6	86 (LHD)		93 (RHD)		

⬭ : RELAY BLOCKS

Code	See Page	Relay Blocks (Relay Block Location)
1	78	Engine Room R/B No.1 (Engine Compartment Left)

⬭ : JUNCTION BLOCK AND WIRE HARNESS CONNECTOR

Code	See Page	Junction Block and Wire Harness (Connector Location)
1A	80	Engine Room Main Wire and Instrument Panel J/B (Lower Finish Panel)
1H	81	Instrument Panel Wire and Instrument Panel J/B (Lower Finish Panel)
1K		
1O		
1P		

▭ : CONNECTOR JOINING WIRE HARNESS AND WIRE HARNESS

Code	See Page	Joining Wire Harness and Wire Harness (Connector Location)
ID2	100 (LHD)	Engine Room Main Wire and Instrument Panel Wire (Left Side of Instrument Panel)
	108 (RHD)	Engine Room Main Wire and Instrument Panel Wire (Right Side of Instrument Panel)

▽ : GROUND POINTS

Code	See Page	Ground Points Location
EA	96 (LHD)	Front Right Fender Apron
	104 (RHD)	
ID	98 (LHD)	Left Kick Panel
IF	106 (RHD)	Right Kick Panel

HEADLIGHT (w/ DAYTIME RUNNING LIGHT)

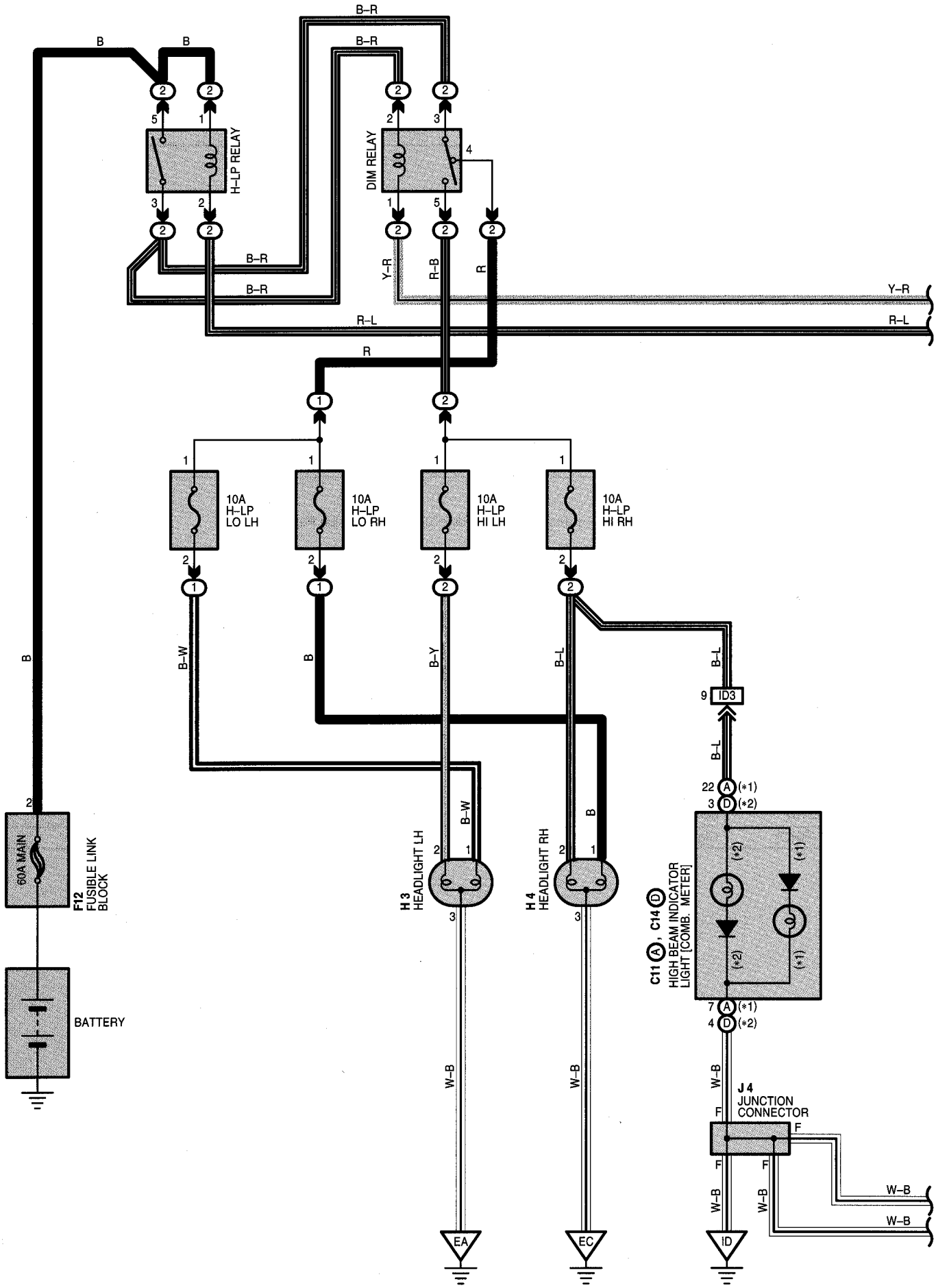

* 1 : ANALOG METER TYPE
* 2 : DIGITAL METER TYPE

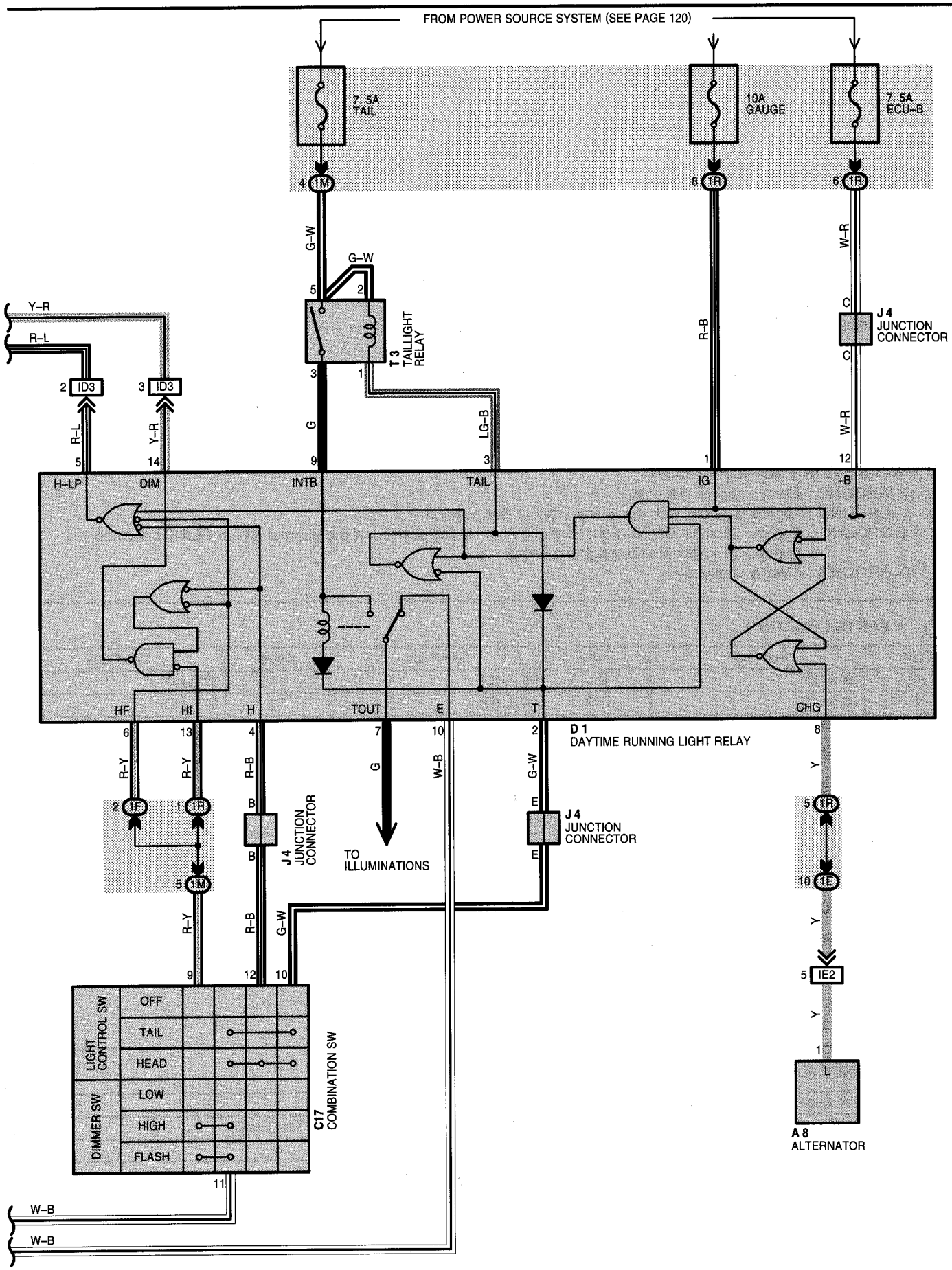

HEADLIGHT (w/ DAYTIME RUNNING LIGHT)

SYSTEM OUTLINE

1. DAYTIME RUNNING LIGHT OPERATION

When the engine is started, voltage is applied from alternator TERMINAL 1 to daytime running light relay TERMINAL 8. This turns on the H-LP realy, and the current flows through the H-LP realy (point side) to DIM relay TERMINAL 3 to TERMINAL 4 to H-LP LO LH, H-LP LO RH fuse to headlight LH, RH TERMINAL 1 to TERMINAL 3 to GROUND, and the headlights come on at low beam.

2. HEADLIGHT OPERATION

When the light control SW is at HEAD position, the current flows through the H-LP realy (coil side) to the daytime running light relay TERMINAL 5, thus the H-LP realy is turned on, and the headlights come on at low beam. When the dimmer SW is turned to HIGH or FLASH position, the DIM relay is turned on, and the current flows from H-LP relay (point side) to DIM relay TERMINAL 3 to TERMINAL 5 to H-LP HI LH, H-LP HI RH fuse to headlight LH, RH TERMINAL 2 to TERMINAL 3 to GROUND, and the headlights come on at high beam.

SERVICE HINTS

H-LP RELAY

3-5 : Closed with the light control SW at **HEAD** position or the dimmer SW at **FLASH** position
Closed with the engine running

DIM RELAY

3-5 : Closed with the dimmer SW at **HIGH** or **FLASH** position

D1 DAYTIME RUNNING LIGHT RELAY

5, 12-GROUND : Always approx. **12** volts
1-GROUND : Approx. **12** volts with the ignition SW at **ON** position
14-GROUND : Approx. **12** volts with the light control SW at **HEAD** position or the dimmer SW at **FLASH** position
Approx. **12** volts with the engine running
10-GROUND : Always continuity

: PARTS LOCATION

Code		See Page	Code	See Page	Code	See Page
A8		84 (LHD)	D1	86 (LHD)	J4	87 (LHD)
C11	A	86 (LHD)	F12	84 (LHD)	T3	87 (LHD)
C14	D	86 (LHD)	H3	85 (LHD)		
C17		86 (LHD)	H4	85 (LHD)		

: RELAY BLOCKS

Code	See Page	Relay Blocks (Relay Block Location)
1	78	Engine Room R/B No.1 (Engine Compartment Left)
2	79	Engine Room R/B No.2 (Engine Compartment Left)

: JUNCTION BLOCK AND WIRE HARNESS CONNECTOR

Code	See Page	Junction Block and Wire Harness (Connector Location)
1E	81	Instrument Panel Wire and Instrument Panel J/B (Lower Finish Panel)
1F		
1M		
1R		

: CONNECTOR JOINING WIRE HARNESS AND WIRE HARNESS

Code	See Page	Joining Wire Harness and Wire Harness (Connector Location)
ID3	100 (LHD)	Engine Room Main Wire and Instrument Panel Wire (Left Side of Instrument Panel)
IE2	100 (LHD)	Engine Wire and Instrument Panel Wire (Behind the Glove Box)

: GROUND POINTS

Code	See Page	Ground Points Location
EA	96 (LHD)	Front Right Fender Apron
EC	96 (LHD)	Front Left Fender Apron
ID	98 (LHD)	Left Kick Panel

HEADLIGHT (w/o DAYTIME RUNNING LIGHT)

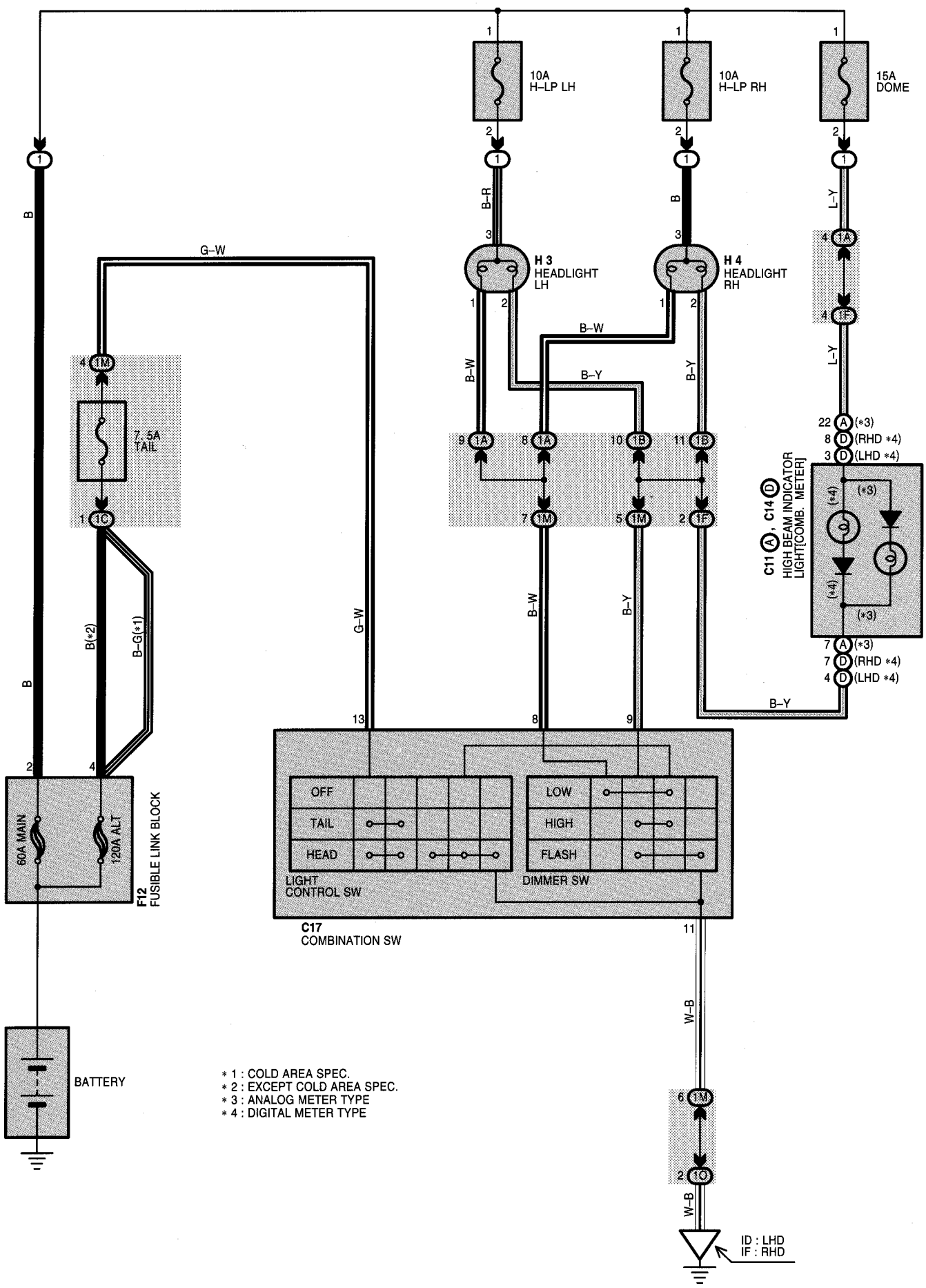

SERVICE HINTS

C17 COMBINATION SW

13–11 : Closed with the light control SW at **HEAD** position
8–11 : Closed with the dimmer SW at **LOW** position
9–11 : Closed with the dimmer SW at **HIGH** or **FLASH** position

○ : PARTS LOCATION

Code		See Page	Code	See Page	Code	See Page
C11	A	86 (LHD)	C17	86 (LHD)	H3	85 (LHD)
		92 (RHD)		92 (RHD)		91 (RHD)
C14	D	86 (LHD)	F12	84 (LHD)	H4	85 (LHD)
		92 (RHD)		90 (RHD)		91 (RHD)

▭ : RELAY BLOCKS

Code	See Page	Relay Blocks (Relay Block Location)
1	78	Engine Room R/B No.1 (Engine Compartment Left)

▭ : JUNCTION BLOCK AND WIRE HARNESS CONNECTOR

Code	See Page	Junction Block and Wire Harness (Connector Location)
1A	80	Engine Room Main Wire and Instrument Panel J/B (Lower Finish Panel)
1B		
1C		
1F	81	Instrument Panel Wire and Instrument Panel J/B (Lower Finish Panel)
1M		
1O		

▽ : GROUND POINTS

Code	See Page	Ground Points Location
ID	98 (LHD)	Left Kick Panel
IF	106 (RHD)	Right Kick Panel

HEADLIGHT BEAM LEVEL CONTROL (w/ DAYTIME RUNNING LIGHT)

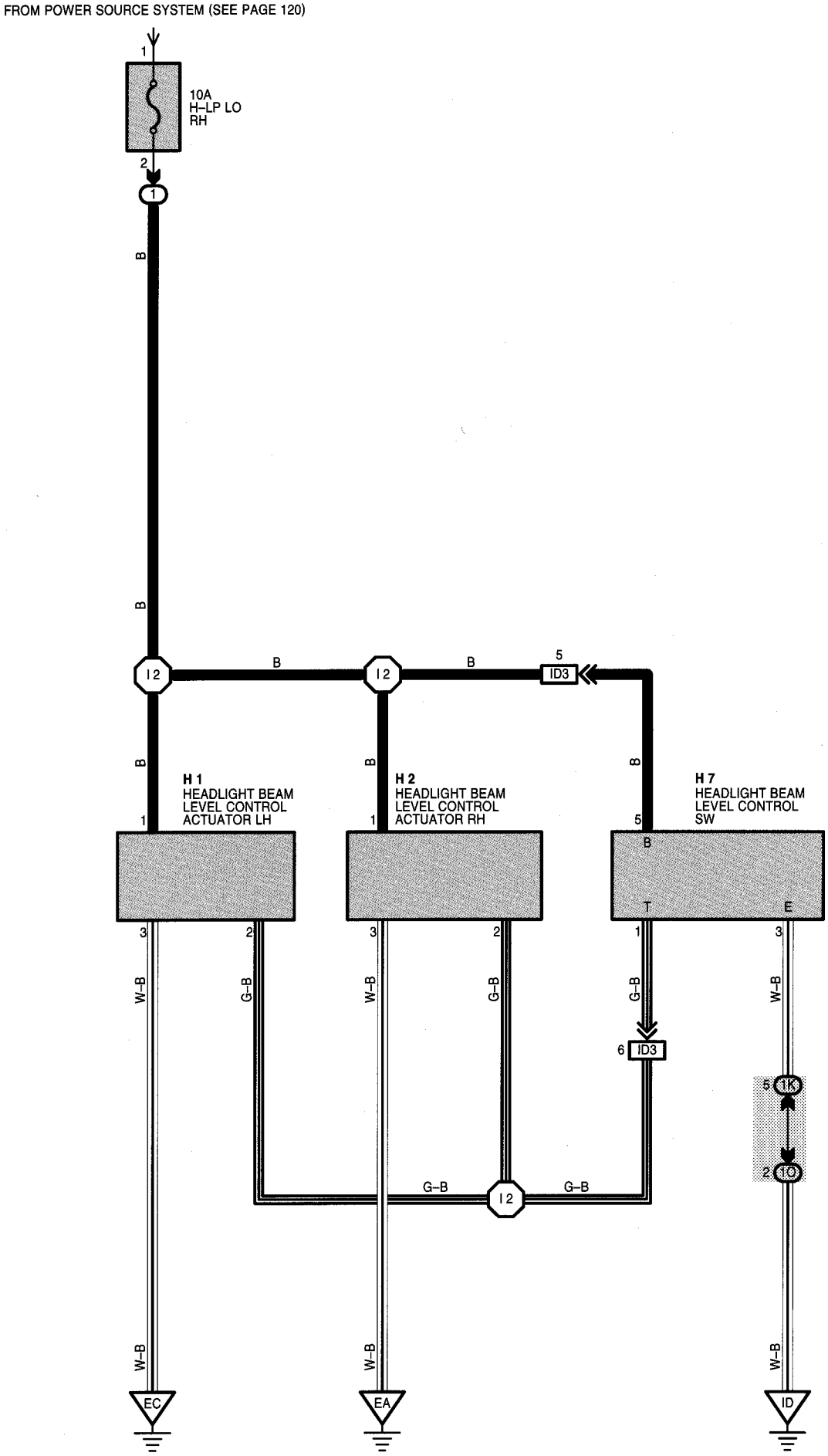

SERVICE HINTS

H1, H2 HEADLIGHT BEAM LEVEL CONTROL ACTUATOR LH, RH

1-GROUND : Approx. **12** volts with the light control SW at **HEAD** position
Approx. **12** volts with the engine running

3-GROUND : Always continuity

H7 HEADLIGHT BEAM LEVEL CONTROL SW

5-GROUND : Approx. **12** volts with the light control SW at **HEAD** position
Approx. **12** volts with the engine running

3-GROUND : Always continuity

: PARTS LOCATION

Code	See Page	Code	See Page	Code	See Page
H1	85 (LHD)	H2	85 (LHD)	H7	87 (LHD)

: RELAY BLOCKS

Code	See Page	Relay Blocks (Relay Block Location)
1	78	Engine Room R/B No.1 (Engine Compartment Left)

: JUNCTION BLOCK AND WIRE HARNESS CONNECTOR

Code	See Page	Junction Block and Wire Harness (Connector Location)
1K	81	Instrument Panel Wire and Instrument Panel J/B (Lower Finish Panel)
1O		

: CONNECTOR JOINING WIRE HARNESS AND WIRE HARNESS

Code	See Page	Joining Wire Harness and Wire Harness (Connector Location)
ID3	100 (LHD)	Engine Room Main Wire and Instrument Panel Wire (Left Side of Instrument Panel)

: GROUND POINTS

Code	See Page	Ground Points Location
EA	96 (LHD)	Front Right Fender Apron
EC	96 (LHD)	Front Left Fender Apron
ID	98 (LHD)	Left Kick Panel

: SPLICE POINTS

Code	See Page	Wire Harness with Splice Points	Code	See Page	Wire Harness with Splice Points
I2	100 (LHD)	Engine Room Main Wire			

HEADLIGHT BEAM LEVEL CONTROL (w/o DAYTIME RUNNING LIGHT)

* 1 : COLD AREA SPEC.
* 2 : EXCEPT COLD AREA SPEC.

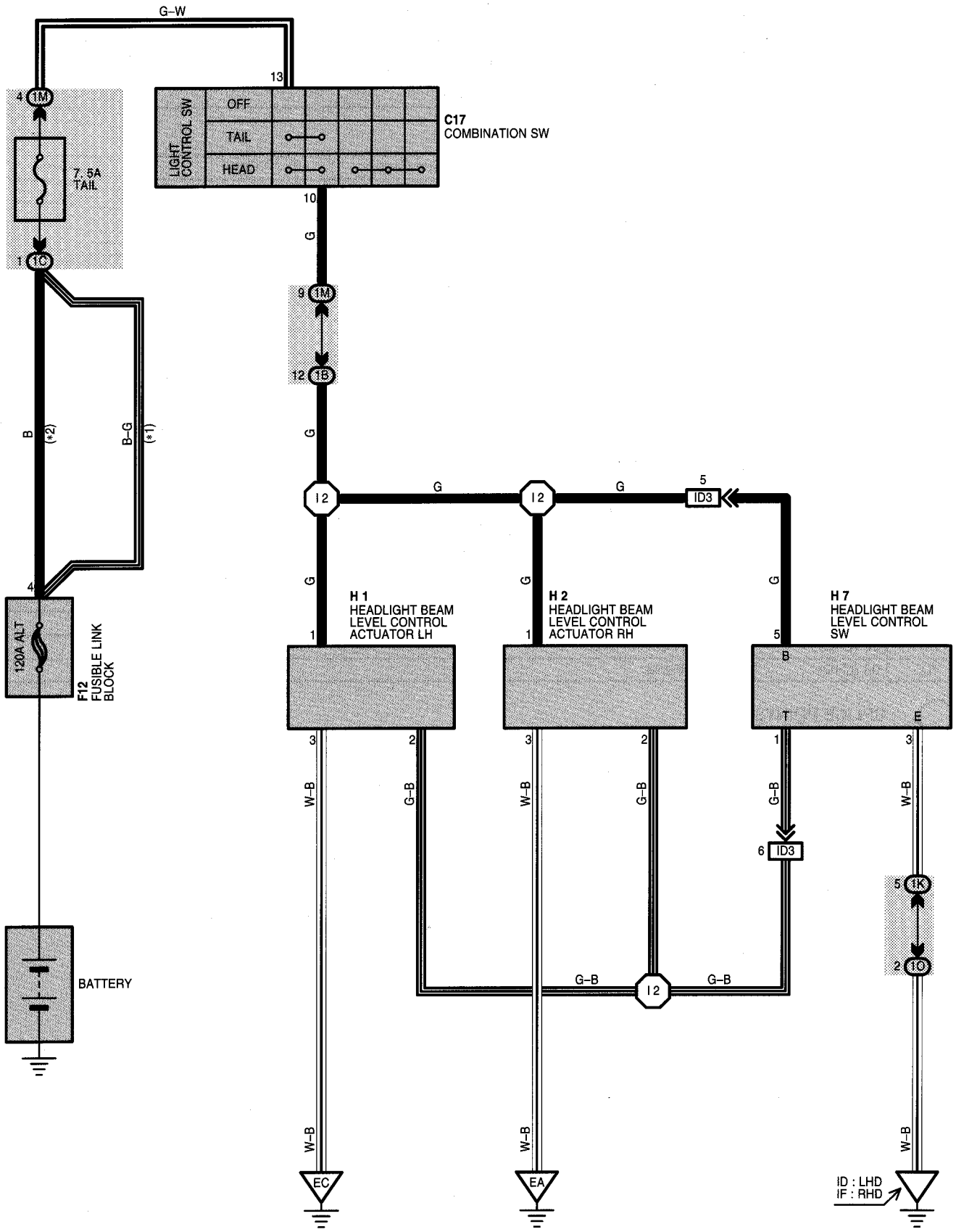

SERVICE HINTS

H1, H2 HEADLIGHT BEAM LEVEL CONTROL ACTUATOR LH, RH

1-GROUND : Approx. **12** volts with the light control SW at **HEAD** position
3-GROUND : Always continuity

H7 HEADLIGHT BEAM LEVEL CONTROL SW

5-GROUND : Approx. **12** volts with the light control SW at **HEAD** position
3-GROUND : Always continuity

○ : PARTS LOCATION

Code	See Page	Code	See Page	Code	See Page
C17	86 (LHD)	H1	85 (LHD)	H7	87 (LHD)
	92 (RHD)		91 (RHD)		93 (RHD)
F12	84 (LHD)	H2	85 (LHD)		
	90 (RHD)		91 (RHD)		

: JUNCTION BLOCK AND WIRE HARNESS CONNECTOR

Code	See Page	Junction Block and Wire Harness (Connector Location)
1B	80	Engine Room Main Wire and Instrument Panel J/B (Lower Finish Panel)
1C		
1K	81	Instrument Panel Wire and Instrument Panel J/B (Lower Finish Panel)
1M		
1O		

: CONNECTOR JOINING WIRE HARNESS AND WIRE HARNESS

Code	See Page	Joining Wire Harness and Wire Harness (Connector Location)
ID3	100 (LHD)	Engine Room Main Wire and Instrument Panel Wire (Left Side of Instrument Panel)
	108 (RHD)	Engine Room Main Wire and Instrument Panel Wire (Right Side of Instrument Panel)

▽ : GROUND POINTS

Code	See Page	Ground Points Location
EA	96 (LHD)	Front Right Fender Apron
	104 (RHD)	
EC	96 (LHD)	Front Left Fender Apron
	104 (RHD)	
ID	98 (LHD)	Left Kick Panel
IF	106 (RHD)	Right Kick Panel

⬡ : SPLICE POINTS

Code	See Page	Wire Harness with Splice Points	Code	See Page	Wire Harness with Splice Points
I2	100 (LHD)	Engine Room Main Wire	I2	108 (RHD)	Engine Room Main Wire

FRONT FOG LIGHT

* 1 : W/ DAYTIME RUNNING LIGHT
* 2 : W/O DAYTIME RUNNING LIGHT

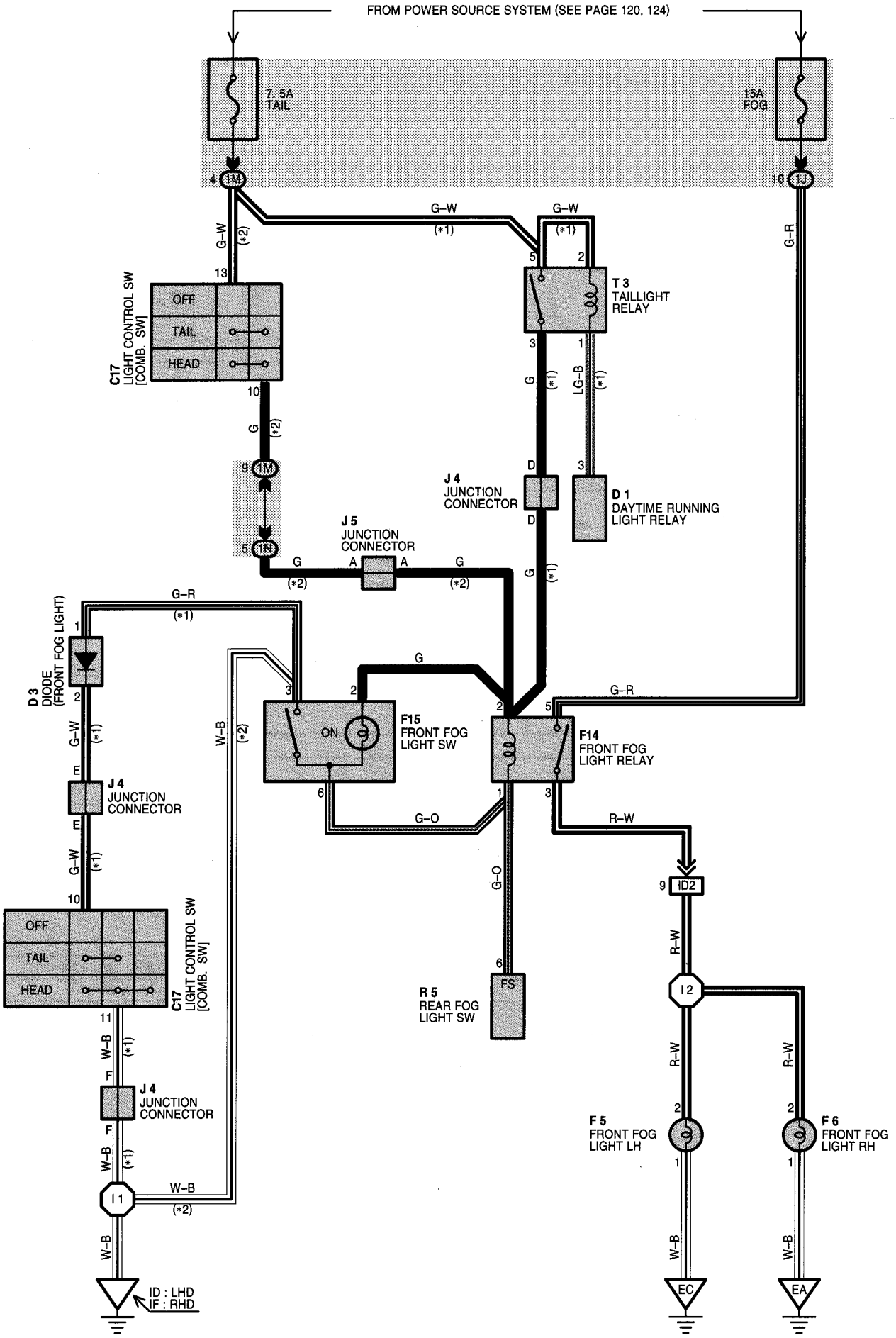

SERVICE HINTS

F15 FRONT FOG LIGHT SW

2-GROUND : Approx. **12** volts with the light control SW at **HEAD** or **TAIL** position
6-GROUND : Approx. **12** volts with the light control SW at **HEAD** or **TAIL** position
3-GROUND : Always continuity (w/o daytime running light)
Continuity with the light control SW at **HEAD** or **TAIL** position (w/ daytime running light)

○ : PARTS LOCATION

Code	See Page	Code	See Page	Code	See Page
C17	86 (LHD)	F6	84 (LHD)	J4	87 (LHD)
	92 (RHD)		90 (RHD)	J5	87 (LHD)
D1	86 (LHD)	F14	87 (LHD)		93 (RHD)
D3	86 (LHD)		93 (RHD)	R5	87 (LHD)
F5	84 (LHD)	F15	87 (LHD)		93 (RHD)
	90 (RHD)		93 (RHD)	T3	87 (LHD)

: JUNCTION BLOCK AND WIRE HARNESS CONNECTOR

Code	See Page	Junction Block and Wire Harness (Connector Location)
1J	81	Instrument Panel Wire and Instrument Panel J/B (Lower Finish Panel)
1M		
1N		

□ : CONNECTOR JOINING WIRE HARNESS AND WIRE HARNESS

Code	See Page	Joining Wire Harness and Wire Harness (Connector Location)
ID2	100 (LHD)	Engine Room Main Wire and Instrument Panel Wire (Left Side of Instrument Panel)
	108 (RHD)	Engine Room Main Wire and Instrument Panel Wire (Right Side of Instrument Panel)

▽ : GROUND POINTS

Code	See Page	Ground Points Location
EA	96 (LHD)	Front Right Fender Apron
	104 (RHD)	
EC	96 (LHD)	Front Left Fender Apron
	104 (RHD)	
ID	98 (LHD)	Left Kick Panel
IF	106 (RHD)	Right Kick Panel

⬡ : SPLICE POINTS

Code	See Page	Wire Harness with Splice Points	Code	See Page	Wire Harness with Splice Points
I1	100 (LHD)	Instrument Panel Wire	I2	100 (LHD)	Engine Room Main Wire
	108 (RHD)			108 (RHD)	

REAR FOG LIGHT (w/ DAYTIME RUNNING LIGHT)

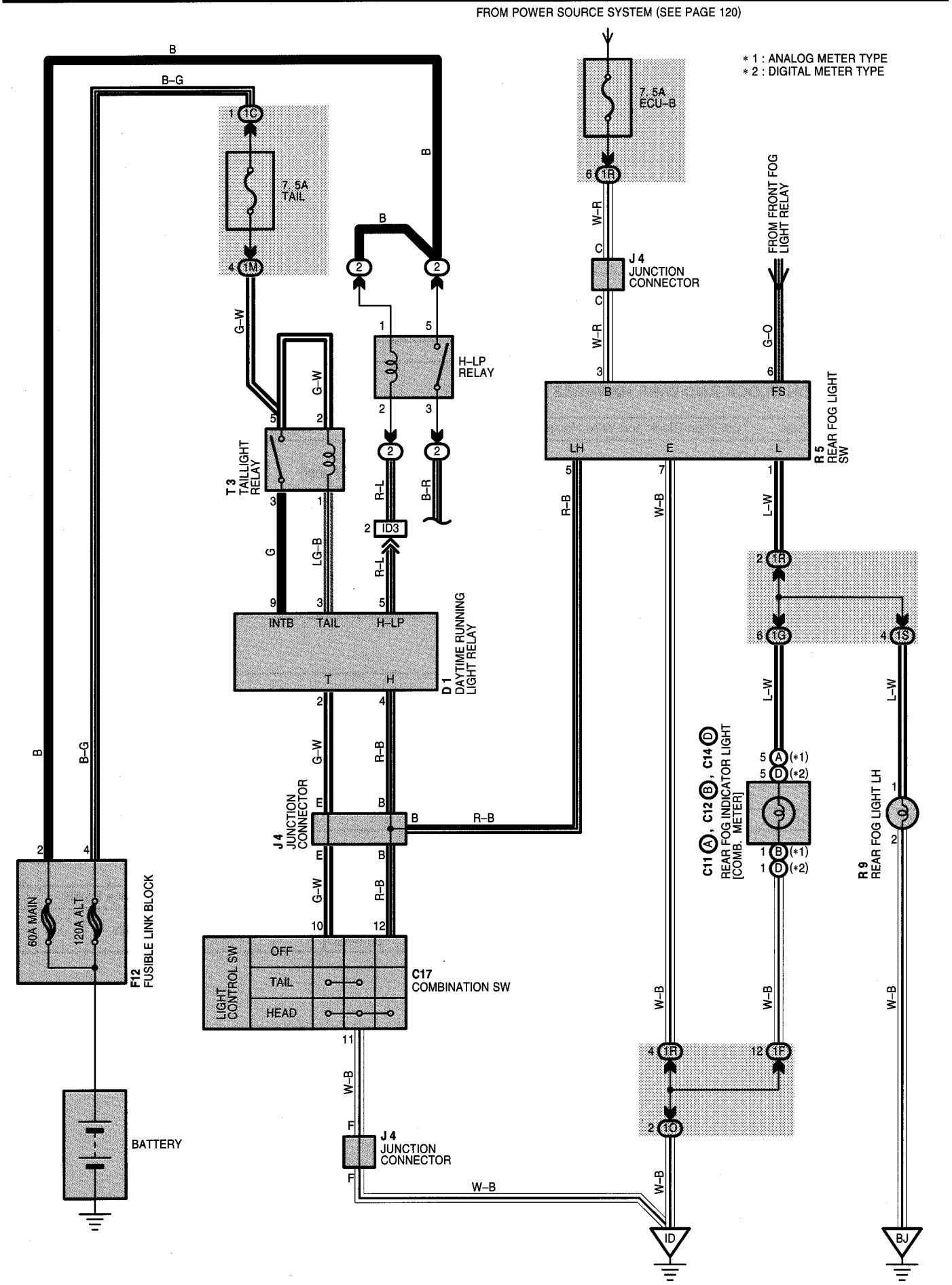

SERVICE HINTS

R5 REAR FOG LIGHT SW

1-GROUND : Approx. **12** volts with the light control SW at **HEAD** or **TAIL** position and rear fog light SW at **ON** position
3-GROUND : Always approx. **12** volts
7-GROUND : Always continuity
5-GROUND : Continuity with the light control SW at **HEAD** or **TAIL** position

○ : PARTS LOCATION

Code		See Page	Code	See Page	Code	See Page
C11	A	86 (LHD)	D1	86 (LHD)	R9	89 (LHD)
C12	B	86 (LHD)	F12	84 (LHD)	T3	87 (LHD)
C14	D	86 (LHD)	J4	87 (LHD)		
C17		86 (LHD)	R5	87 (LHD)		

▭ : RELAY BLOCKS

Code	See Page	Relay Blocks (Relay Block Location)
2	79	Engine Room R/B No.2 (Engine Compartment Left)

▭ : JUNCTION BLOCK AND WIRE HARNESS CONNECTOR

Code	See Page	Junction Block and Wire Harness (Connector Location)
1C	80	Engine Room Main Wire and Instrument Panel J/B (Lower Finish Panel)
1F	81	Instrument Panel Wire and Instrument Panel J/B (Lower Finish Panel)
1G		
1M		
1O		
1R		
1S	80	Floor Wire and Instrument Panel J/B (Lower Finish Panel)

▭ : CONNECTOR JOINING WIRE HARNESS AND WIRE HARNESS

Code	See Page	Joining Wire Harness and Wire Harness (Connector Location)
ID3	100 (LHD)	Engine Room Main Wire and Instrument Panel Wire (Left Side of Instrument Panel)

▽ : GROUND POINTS

Code	See Page	Ground Points Location
ID	98 (LHD)	Left Kick Panel
BJ	102 (LHD)	Right Rear Side Quarter Panel

REAR FOG LIGHT (w/o DAYTIME RUNNING LIGHT)

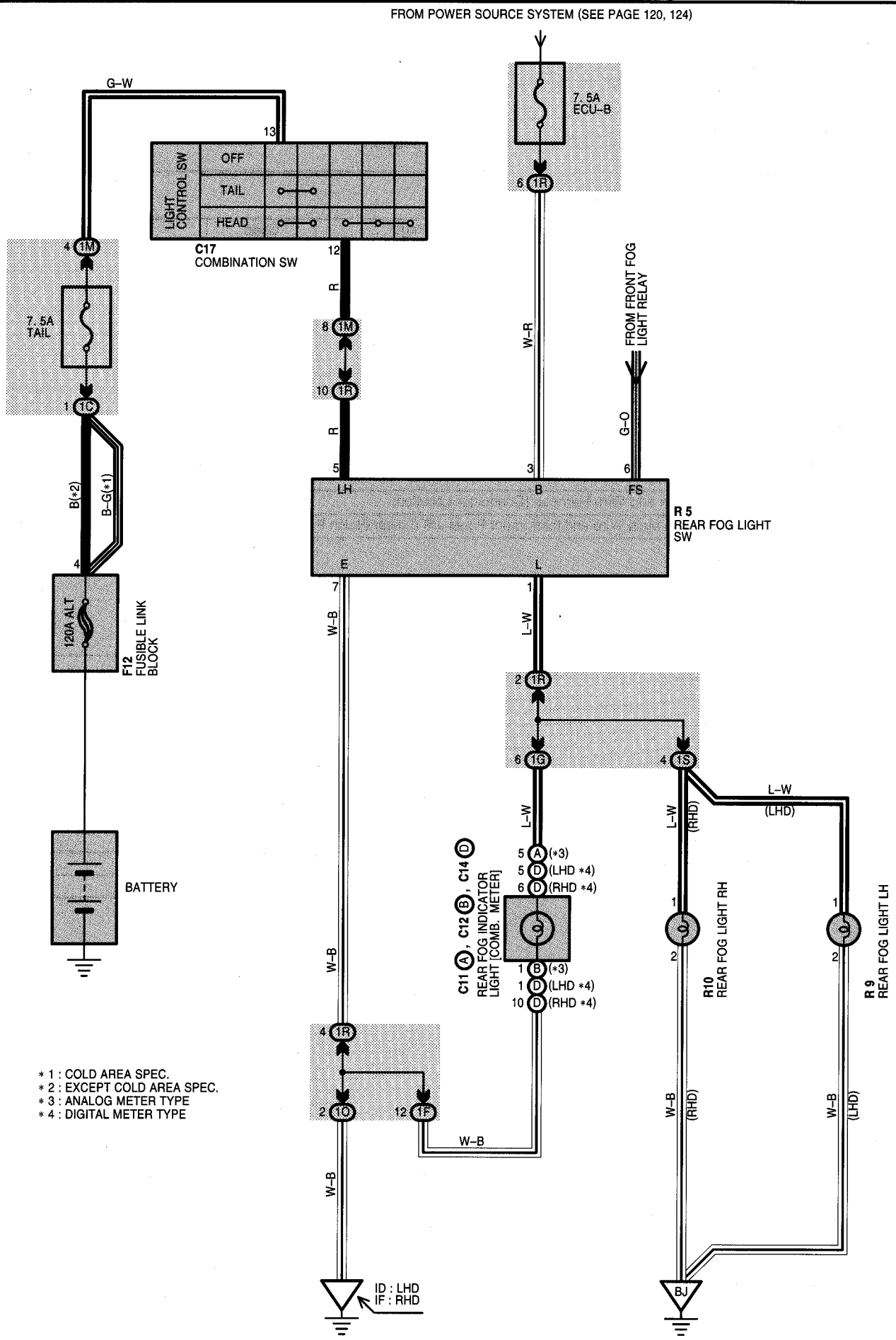

SERVICE HINTS

R5 REAR FOG LIGHT SW

1-GROUND : Approx. **12** volts with the light control SW at **HEAD** or **TAIL** position and rear fog light SW at **ON** position
3-GROUND : Always approx. **12** volts
5-GROUND : Continuity with the light control SW at **HEAD** or **TAIL** position
7-GROUND : Always continuity

○ : PARTS LOCATION

Code		See Page	Code		See Page	Code	See Page
C11	A	86 (LHD)	C14	D	92 (RHD)	R5	87 (LHD)
		92 (RHD)	C17		86 (LHD)		93 (RHD)
C12	B	86 (LHD)			92 (RHD)	R9	89 (LHD)
		92 (RHD)	F12		84 (LHD)	R10	95 (RHD)
C14	D	86 (LHD)			90 (RHD)		

: JUNCTION BLOCK AND WIRE HARNESS CONNECTOR

Code	See Page	Junction Block and Wire Harness (Connector Location)
1C	80	Engine Room Main Wire and Instrument Panel J/B (Lower Finish Panel)
1F	81	Instrument Panel Wire and Instrument Panel J/B (Lower Finish Panel)
1G		
1M		
1O		
1R		
1S	80	Floor Wire and Instrument Panel J/B (Lower Finish Panel)

▽ : GROUND POINTS

Code	See Page	Ground Points Location
ID	98 (LHD)	Left Kick Panel
IF	106 (RHD)	Right Kick Panel
BJ	102 (LHD)	Right Rear Side Quarter Panel
	110 (RHD)	

TAILLIGHT AND ILLUMINATION (w/ DAYTIME RUNNING LIGHT)

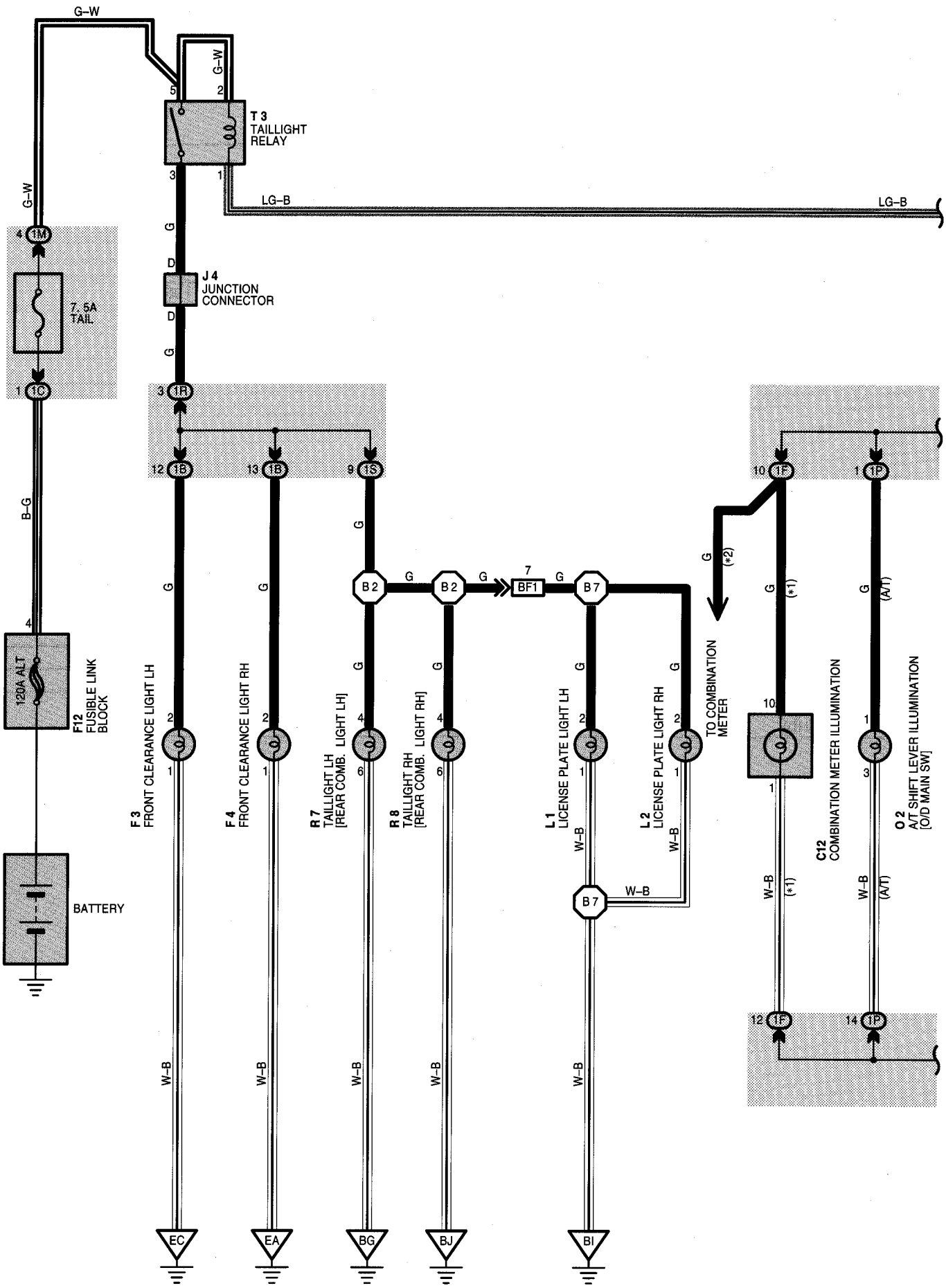

* 1 : ANALOG METER TYPE
* 2 : DIGITAL METER TYPE
* 3 : W/ MULTI DISPLAY
* 4 : W/O MULTI DISPLAY

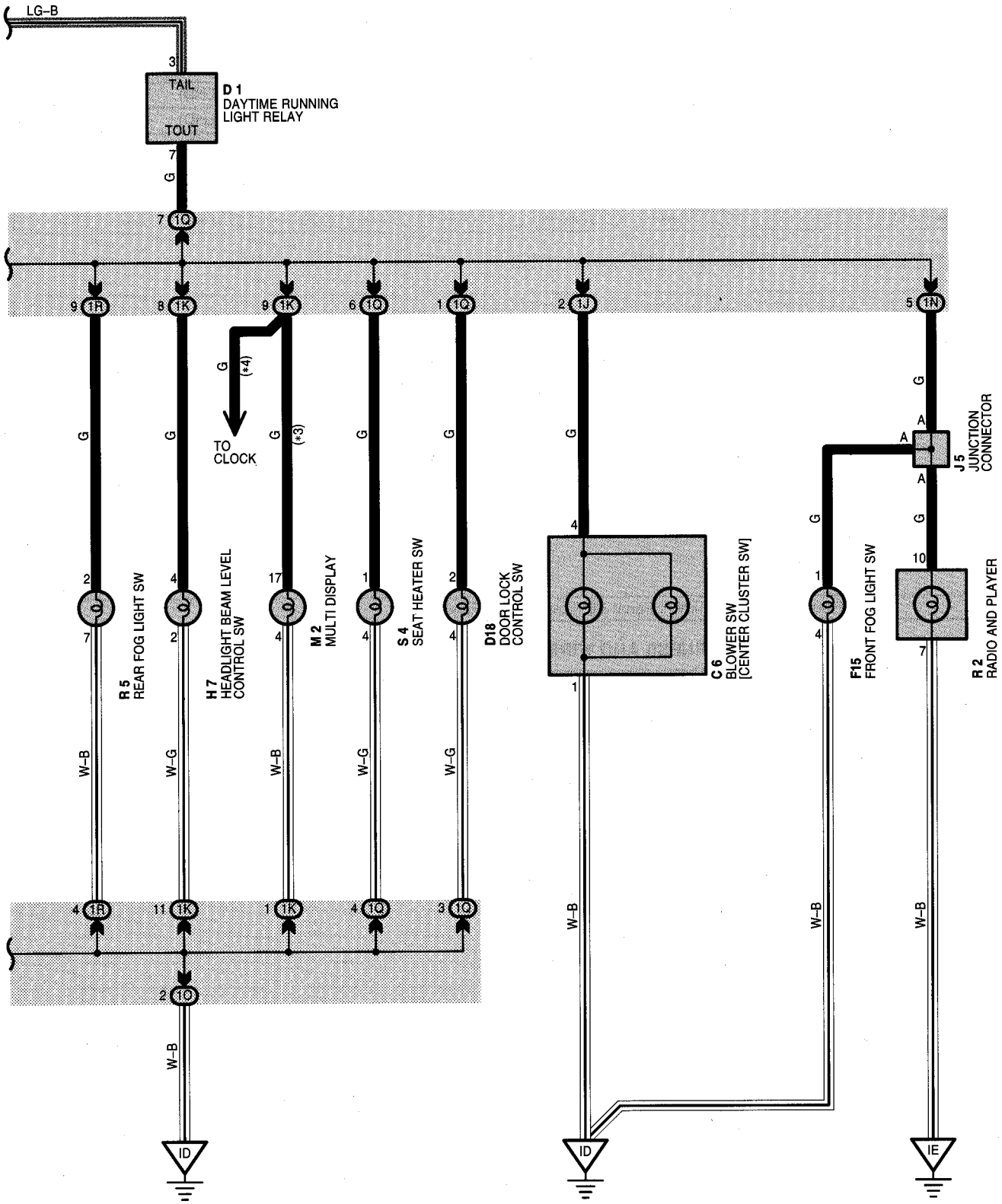

TAILLIGHT AND ILLUMINATION (w/ DAYTIME RUNNING LIGHT)

SERVICE HINTS

D1 DAYTIME RUNNING LIGHT RELAY

3-GROUND : Always approx. **12** volts
7-GROUND : Approx. **12** volts with the engine running
Approx. **12** volts with the light control SW at **HEAD** or **TAIL** position

T3 TAILLIGHT RELAY

5-3 : Closed with the light control SW at **HEAD** or **TAIL** position

○ : PARTS LOCATION

Code	See Page	Code	See Page	Code	See Page
C6	86 (LHD)	F15	87 (LHD)	O2	87 (LHD)
C12	86 (LHD)	H7	87 (LHD)	R2	87 (LHD)
D1	86 (LHD)	J4	87 (LHD)	R5	87 (LHD)
D18	86 (LHD)	J5	87 (LHD)	R7	89 (LHD)
F3	84 (LHD)	L1	89 (LHD)	R8	89 (LHD)
F4	84 (LHD)	L2	89 (LHD)	S4	87 (LHD)
F12	84 (LHD)	M2	87 (LHD)	T3	87 (LHD)

: JUNCTION BLOCK AND WIRE HARNESS CONNECTOR

Code	See Page	Junction Block and Wire Harness (Connector Location)
1B	80	Engine Room Main Wire and Instrument Panel J/B (Lower Finish Panel)
1C		
1F	81	Instrument Panel Wire and Instrument Panel J/B (Lower Finish Panel)
1J		
1K		
1M		
1N		
1O		
1P		
1Q		
1R		
1S	80	Floor Wire and Instrument Panel J/B (Lower Finish Panel)

□ : CONNECTOR JOINING WIRE HARNESS AND WIRE HARNESS

Code	See Page	Joining Wire Harness and Wire Harness (Connector Location)
BF1	102 (LHD)	Back Door No.1 Wire and Floor Wire (Right Side of Back Door)

▽ : GROUND POINTS

Code	See Page	Ground Points Location
EA	96 (LHD)	Front Right Fender Apron
EC	96 (LHD)	Front Left Fender Apron
ID	98 (LHD)	Left Kick Panel
IE	98 (LHD)	Instrument Panel Brace LH
IF	98 (LHD)	Right Kick Panel
BG	102 (LHD)	Left Rear Side Quarter Panel
BI	102 (LHD)	Right Side of Back Door
BJ	102 (LHD)	Right Rear Side Quarter Panel

⬡ : SPLICE POINTS

Code	See Page	Wire Harness with Splice Points	Code	See Page	Wire Harness with Splice Points
B2	102 (LHD)	Floor Wire	B7	102 (LHD)	Back Door No.1 Wire

TAILLIGHT AND ILLUMINATION (w/o DAYTIME RUNNING LIGHT)

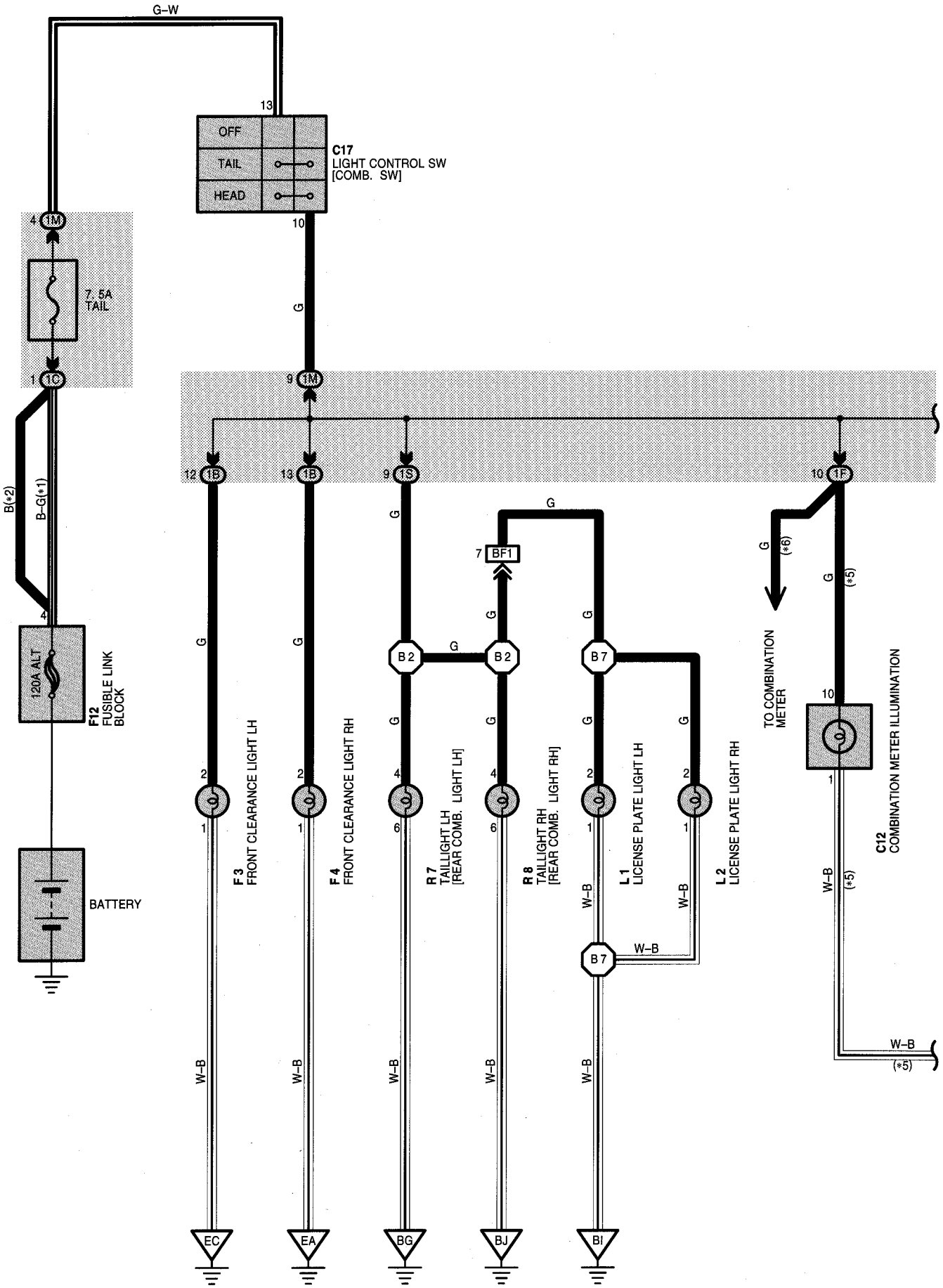

* 1 : COLD AREA SPEC.
* 2 : EXCEPT COLD AREA SPEC.
* 3 : W/ MULTI DISPLAY
* 4 : W/O MULTI DISPLAY
* 5 : ANALOG METER TYPE
* 6 : DIGITAL METER TYPE

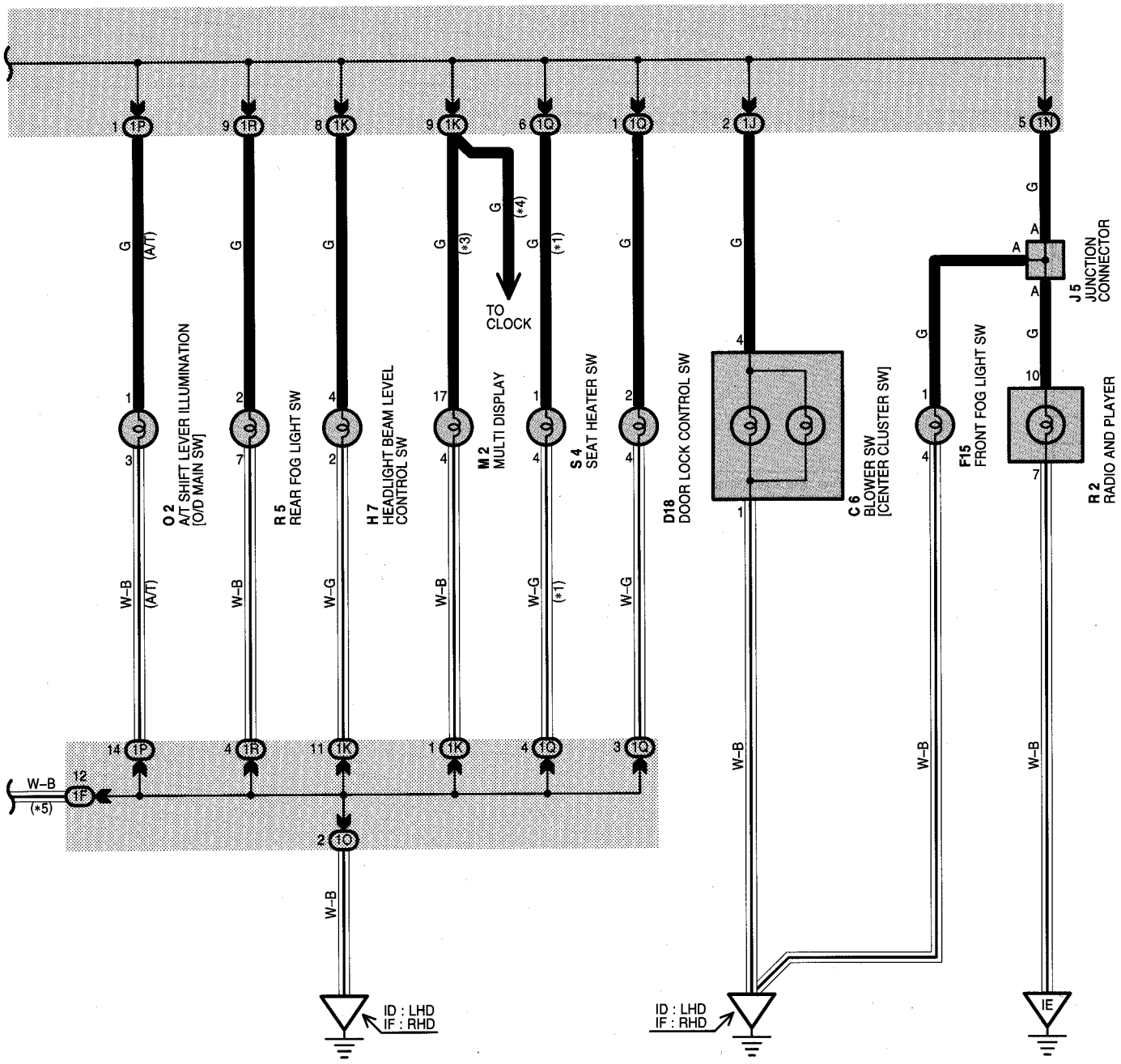

TAILLIGHT AND ILLUMINATION (w/o DAYTIME RUNNING LIGHT)

SERVICE HINTS

C17 LIGHT CONTROL SW [COMB. SW]

13–10 : Closed with the light control SW at **HEAD** or **TAIL** position

○ : PARTS LOCATION

Code	See Page	Code	See Page	Code	See Page
C6	86 (LHD)	F12	90 (RHD)	O2	87 (LHD)
	92 (RHD)	F15	87 (LHD)		93 (RHD)
C12	86 (LHD)		93 (RHD)	R2	87 (LHD)
	92 (RHD)	H7	87 (LHD)		93 (RHD)
C17	86 (LHD)		93 (RHD)	R5	87 (LHD)
	92 (RHD)	J5	87 (LHD)		93 (RHD)
D18	86 (LHD)		93 (RHD)	R7	89 (LHD)
	92 (RHD)	L1	89 (LHD)		95 (RHD)
F3	84 (LHD)		95 (RHD)	R8	89 (LHD)
	90 (RHD)	L2	89 (LHD)		95 (RHD)
F4	84 (LHD)		95 (RHD)	S4	87 (LHD)
	90 (RHD)	M2	87 (LHD)		
F12	84 (LHD)		93 (RHD)		

: JUNCTION BLOCK AND WIRE HARNESS CONNECTOR

Code	See Page	Junction Block and Wire Harness (Connector Location)
1B	80	Engine Room Main Wire and Instrument Panel J/B (Lower Finish Panel)
1C		
1F	81	Instrument Panel Wire and Instrument Panel J/B (Lower Finish Panel)
1J		
1K		
1M		
1N		
1O		
1P		
1Q		
1R		
1S	80	Floor Wire and Instrument Panel J/B (Lower Finish Panel)

□ : CONNECTOR JOINING WIRE HARNESS AND WIRE HARNESS

Code	See Page	Joining Wire Harness and Wire Harness (Connector Location)
BF1	102 (LHD)	Back Door No.1 Wire and Floor Wire (Right Side of Back Door)
	110 (RHD)	

▽ : GROUND POINTS

Code	See Page	Ground Points Location
EA	96 (LHD)	Front Right Fender Apron
	104 (RHD)	
EC	96 (LHD)	Front Left Fender Apron
	104 (RHD)	
ID	98 (LHD)	Left Kick Panel
IE	98 (LHD)	Instrument Panel Brace LH
	106 (RHD)	Instrument Panel Brace RH
IF	106 (RHD)	Right Kick Panel
BG	102 (LHD)	Left Rear Side Quarter Panel
	110 (RHD)	
BI	102 (LHD)	Right Side of Back Door
	110 (RHD)	
BJ	102 (LHD)	Right Rear Side Quarter Panel
	110 (RHD)	

⬡ : SPLICE POINTS

Code	See Page	Wire Harness with Splice Points	Code	See Page	Wire Harness with Splice Points
B2	102 (LHD)	Floor Wire	B7	102 (LHD)	Back Door No.1 Wire
	110 (RHD)			110 (RHD)	

TURN SIGNAL AND HAZARD WARNING LIGHT

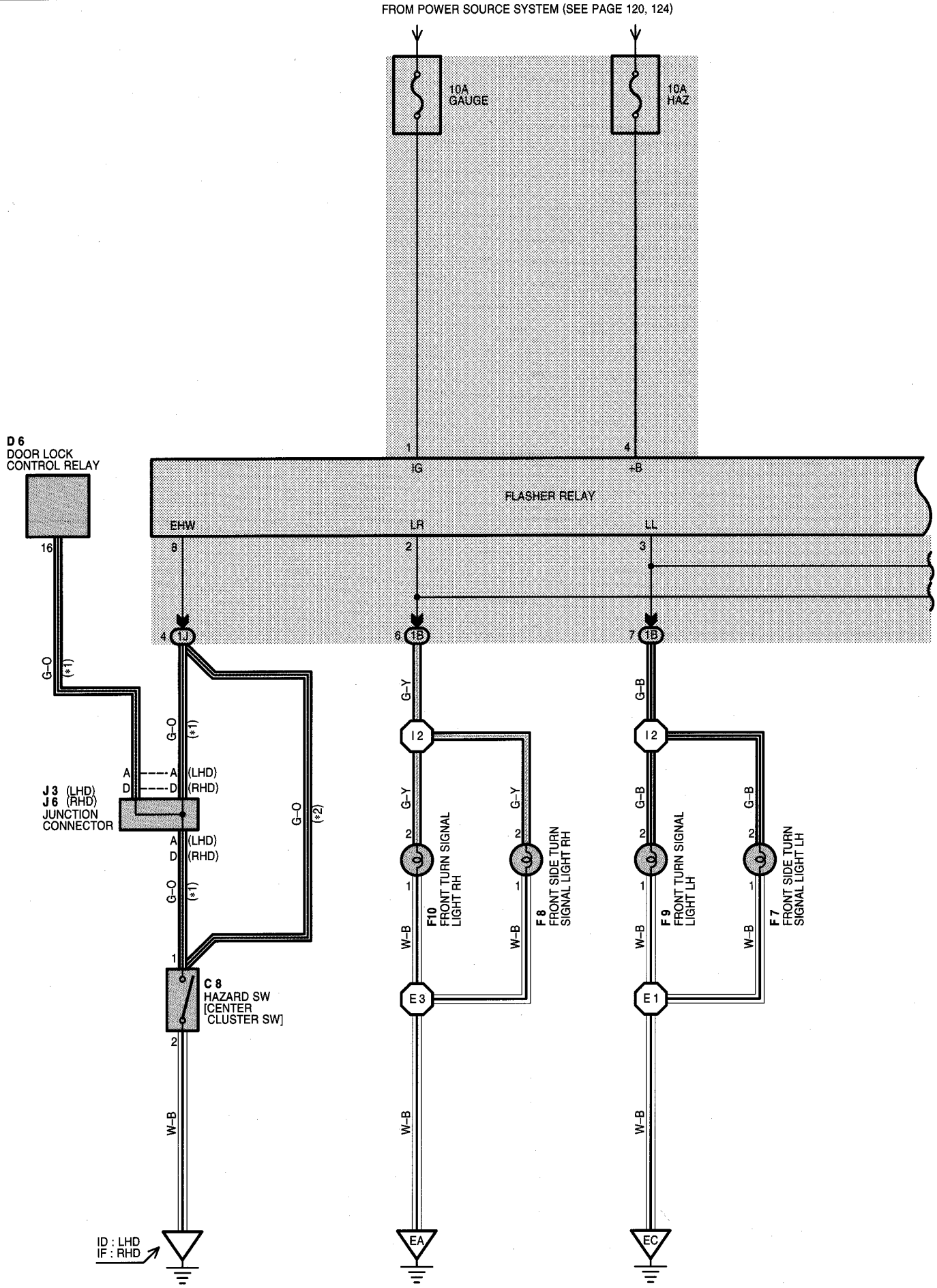

* 1 : W/ DOOR LOCK CONTROL
* 2 : W/O DOOR LOCK CONTROL
* 3 : ANALOG METER TYPE
* 4 : RHD DIGITAL METER TYPE
* 5 : LHD DIGITAL METER TYPE

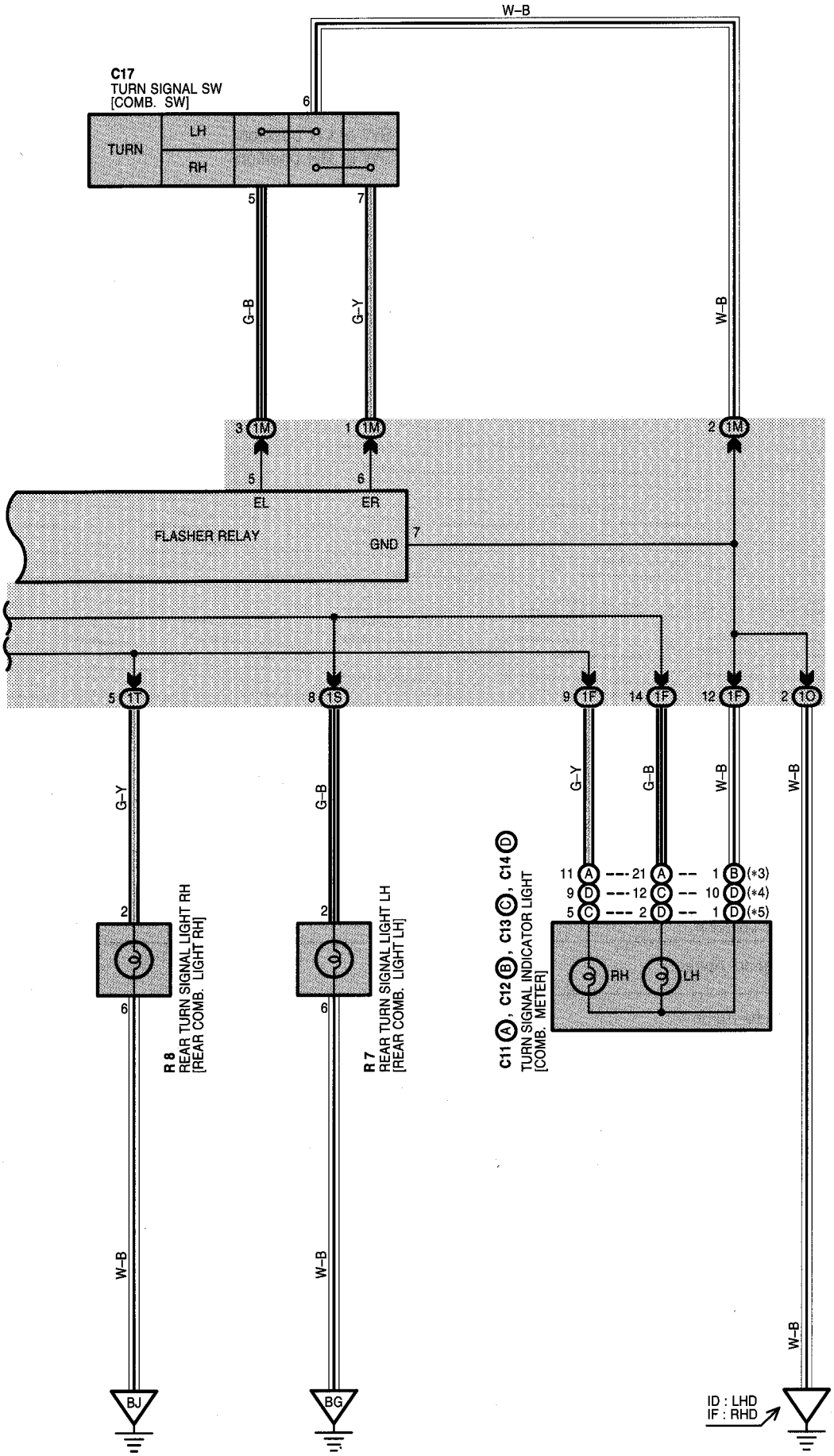

TURN SIGNAL AND HAZARD WARNING LIGHT

SERVICE HINTS

FLASHER RELAY

1-GROUND : Approx. **12** volts with the ignition SW at **ON** position
4-GROUND : Always approx. **12** volts
2, 3-GROUND : Changes from approx. **12** to **0** volts with the ignition SW at **ON** position and the turn signal SW at **LEFT** or **RIGHT** position or the hazard SW at **ON** position
5-GROUND : Continuity with the ignition SW at **ON** position and the turn signal SW at **LH** position
6-GROUND : Continuity with the ignition SW at **ON** position and the turn signal SW at **RH** position
8-GROUND : Continuity with the hazard SW at on
7-GROUND : Always continuity

: PARTS LOCATION

Code		See Page	Code	See Page	Code	See Page
C8		86 (LHD)	C17	86 (LHD)	F10	84 (LHD)
		92 (RHD)		92 (RHD)		90 (RHD)
C11	A	86 (LHD)	D6	86 (LHD)	J3	87 (LHD)
		92 (RHD)		92 (RHD)	J6	87 (LHD)
C12	B	86 (LHD)	F7	84 (LHD)		93 (RHD)
		92 (RHD)		90 (RHD)	R7	89 (LHD)
C13	C	86 (LHD)	F8	84 (LHD)		95 (RHD)
		92 (RHD)		90 (RHD)	R8	89 (LHD)
C14	D	86 (LHD)	F9	84 (LHD)		95 (RHD)
		92 (RHD)		90 (RHD)		

: JUNCTION BLOCK AND WIRE HARNESS CONNECTOR

Code	See Page	Junction Block and Wire Harness (Connector Location)
1B	80	Engine Room Main Wire and Instrument Panel J/B (Lower Finish Panel)
1F	81	Instrument Panel Wire and Instrument Panel J/B (Lower Finish Panel)
1J		
1M		
1O		
1S	80	Floor Wire and Instrument Panel J/B (Lower Finish Panel)
1T		

: GROUND POINTS

Code	See Page	Ground Points Location
EA	96 (LHD)	Front Right Fender Apron
	104 (RHD)	
EC	96 (LHD)	Front Left Fender Apron
	104 (RHD)	
ID	98 (LHD)	Left Kick Panel
IF	106 (RHD)	Right Kick Panel
BG	102 (LHD)	Left Rear Side Quarter Panel
	110 (RHD)	
BJ	102 (LHD)	Right Rear Side Quarter Panel
	110 (RHD)	

: SPLICE POINTS

Code	See Page	Wire Harness with Splice Points	Code	See Page	Wire Harness with Splice Points
E1	104 (RHD)	Engine Room Main Wire	E3	96 (LHD)	Engine Room Main Wire
	96 (LHD)		I2	100 (LHD)	
E3	104 (RHD)			108 (RHD)	

STOP LIGHT

* 1 : W/ HIGH MOUNTED STOP LIGHT

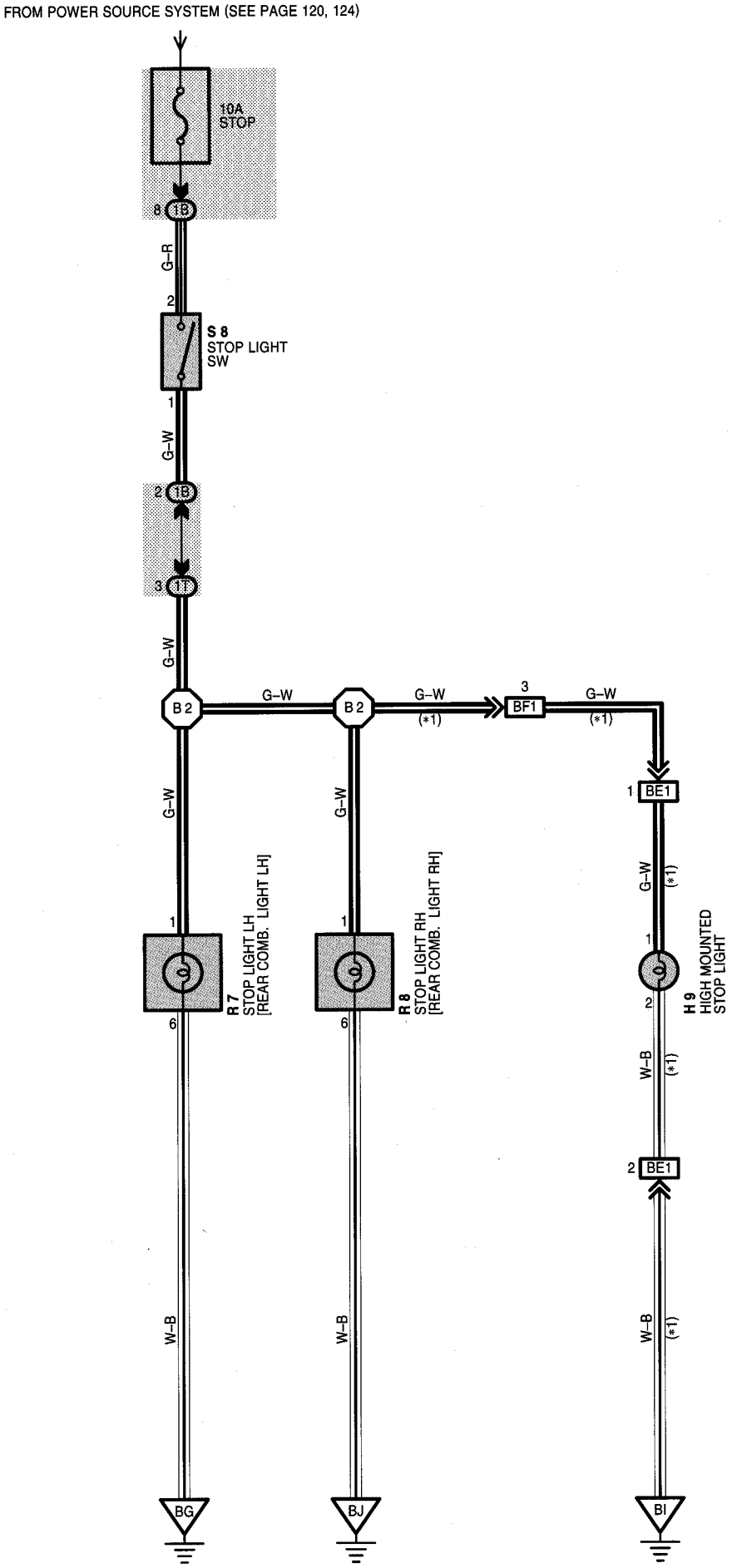

SERVICE HINTS

S8 STOP LIGHT SW

1–2 : Closed with the brake pedal depressed

○ : PARTS LOCATION

Code	See Page	Code	See Page	Code	See Page
H9	88 (LHD)	R7	95 (RHD)	S8	87 (LHD)
	94 (RHD)	R8	89 (LHD)		93 (RHD)
R7	89 (LHD)		95 (RHD)		

: JUNCTION BLOCK AND WIRE HARNESS CONNECTOR

Code	See Page	Junction Block and Wire Harness (Connector Location)
1B	80	Engine Room Main Wire and Instrument Panel J/B (Lower Finish Panel)
1T	80	Floor Wire and Instrument Panel J/B (Lower Finish Panel)

: CONNECTOR JOINING WIRE HARNESS AND WIRE HARNESS

Code	See Page	Joining Wire Harness and Wire Harness (Connector Location)
BE1	102 (LHD)	Back Door No.2 Wire and Back Door No.1 Wire (Right Side of Back Door)
	110 (RHD)	
BF1	102 (LHD)	Back Door No.1 Wire and Floor Wire (Right Side of Back Door)
	110 (RHD)	

▽ : GROUND POINTS

Code	See Page	Ground Points Location
BG	102 (LHD)	Left Rear Side Quarter Panel
	110 (RHD)	
BI	102 (LHD)	Right Side of Back Door
	110 (RHD)	
BJ	102 (LHD)	Right Rear Side Quarter Panel
	110 (RHD)	

⬡ : SPLICE POINTS

Code	See Page	Wire Harness with Splice Points	Code	See Page	Wire Harness with Splice Points
B2	102 (LHD)	Floor Wire	B2	110 (RHD)	Floor Wire

BACK-UP LIGHT

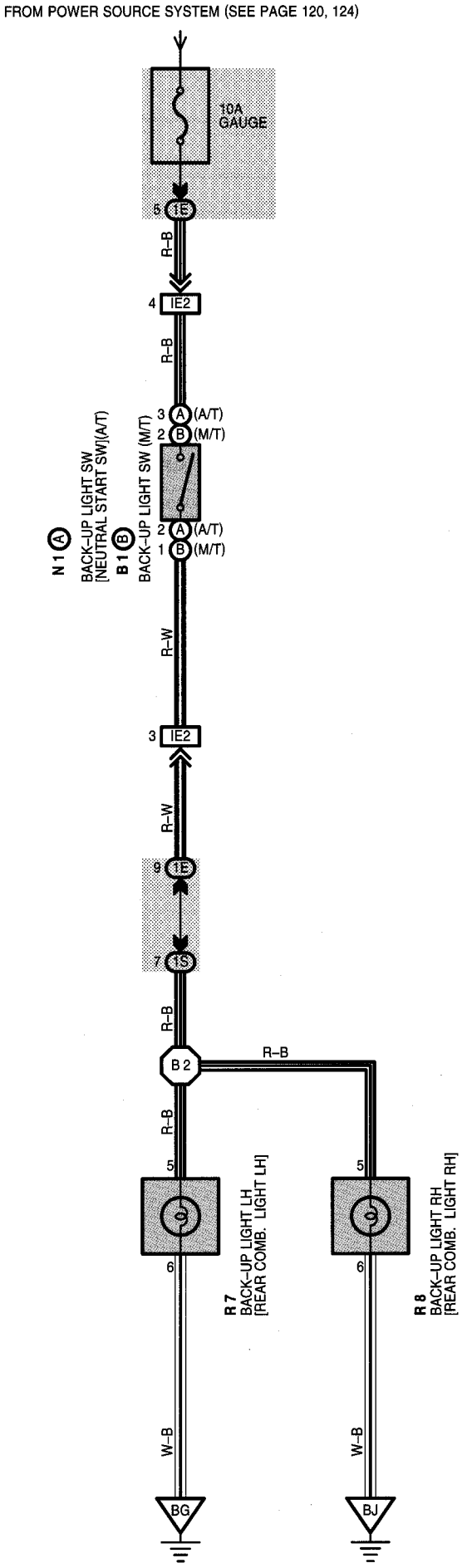

SERVICE HINTS

B1 (B) BACK-UP LIGHT SW (M/T)

(B) 2-(B) 1 : Closed with the shift lever in **R** position

N1 (A) BACK-UP LIGHT SW [NEUTRAL START SW] (A/T)

(A) 3-(A) 2 : Closed with the shift lever in **R** position

○ : PARTS LOCATION

Code		See Page	Code		See Page	Code	See Page
B1	B	84 (LHD)	N1	A	91 (RHD)	R8	89 (LHD)
		90 (RHD)	R7		89 (LHD)		95 (RHD)
N1	A	85 (LHD)			95 (RHD)		

: JUNCTION BLOCK AND WIRE HARNESS CONNECTOR

Code	See Page	Junction Block and Wire Harness (Connector Location)
1E	81	Instrument Panel Wire and Instrument Panel J/B (Lower Finish Panel)
1S	80	Floor Wire and Instrument Panel J/B (Lower Finish Panel)

: CONNECTOR JOINING WIRE HARNESS AND WIRE HARNESS

Code	See Page	Joining Wire Harness and Wire Harness (Connector Location)
IE2	100 (LHD)	Engine Wire and Instrument Panel Wire (Behind the Glove Box)
	108 (RHD)	

▽ : GROUND POINTS

Code	See Page	Ground Points Location
BG	102 (LHD)	Left Rear Side Quarter Panel
	110 (RHD)	
BJ	102 (LHD)	Right Rear Side Quarter Panel
	110 (RHD)	

⬡ : SPLICE POINTS

Code	See Page	Wire Harness with Splice Points	Code	See Page	Wire Harness with Splice Points
B2	102 (LHD)	Floor Wire	B2	110 (RHD)	Floor Wire

INTERIOR LIGHT

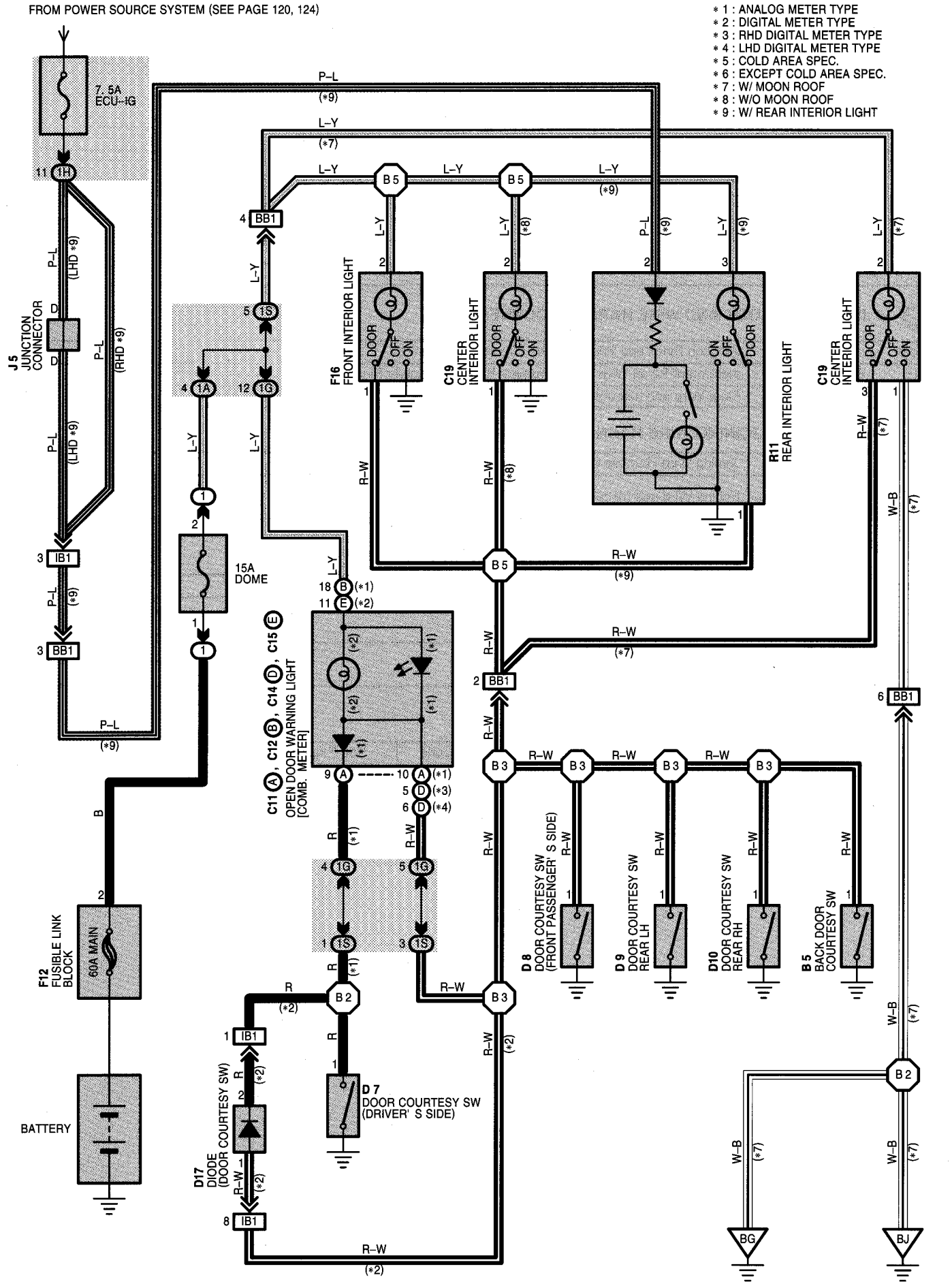

SERVICE HINTS

D7, D8, D9, D10 DOOR COURTESY SW (DRIVER'S SIDE), (FRONT PASSENGER'S SIDE), REAR LH, REAR RH

1-GROUND : Closed with the door open

B5 BACK DOOR COURTESY SW

1-GROUND : Closed with the door open

: PARTS LOCATION

Code		See Page	Code	See Page	Code	See Page
B5		88 (LHD)	C19	88 (LHD)	D17	86 (LHD)
		94 (RHD)		94 (RHD)		92 (RHD)
C11	A	86 (LHD)	D7	88 (LHD)	F12	84 (LHD)
		92 (RHD)		94 (RHD)		90 (RHD)
C12	B	86 (LHD)	D8	88 (LHD)	F16	88 (LHD)
		92 (RHD)		94 (RHD)		94 (RHD)
C14	D	86 (LHD)	D9	88 (LHD)	J5	87 (LHD)
		92 (RHD)		94 (RHD)		93 (RHD)
C15	E	86 (LHD)	D10	88 (LHD)	R11	89 (LHD)
		92 (RHD)		94 (RHD)		95 (RHD)

: RELAY BLOCKS

Code	See Page	Relay Blocks (Relay Block Location)
1	78	Engine Room R/B No.1 (Engine Compartment Left)

: JUNCTION BLOCK AND WIRE HARNESS CONNECTOR

Code	See Page	Junction Block and Wire Harness (Connector Location)
1A	80	Engine Room Main Wire and Instrument Panel J/B (Lower Finish Panel)
1G	81	Instrument Panel Wire and Instrument Panel J/B (Lower Finish Panel)
1H		
1S	80	Floor Wire and Instrument Panel J/B (Lower Finish Panel)

: CONNECTOR JOINING WIRE HARNESS AND WIRE HARNESS

Code	See Page	Joining Wire Harness and Wire Harness (Connector Location)
IB1	98 (LHD)	Floor Wire and Instrument Panel Wire (Left Side of Instrument Panel)
	106 (RHD)	Floor Wire and Instrument Panel Wire (Right Side of Instrument Panel)
BB1	102 (LHD)	Roof Wire and Floor Wire (Left Rear Side Quarter Panel)
	110 (RHD)	Roof Wire and Floor Wire (Right Rear Side Quarter Panel)

: GROUND POINTS

Code	See Page	Ground Points Location
BG	102 (LHD)	Left Rear Side Quarter Panel
	110 (RHD)	
BJ	102 (LHD)	Right Rear Side Quarter Panel
	110 (RHD)	

: SPLICE POINTS

Code	See Page	Wire Harness with Splice Points	Code	See Page	Wire Harness with Splice Points
B2	102 (LHD)	Floor Wire	B3	110 (RHD)	Floor Wire
	110 (RHD)		B5	102 (LHD)	Roof Wire
B3	102 (LHD)			110 (RHD)	

CIGARETTE LIGHTER

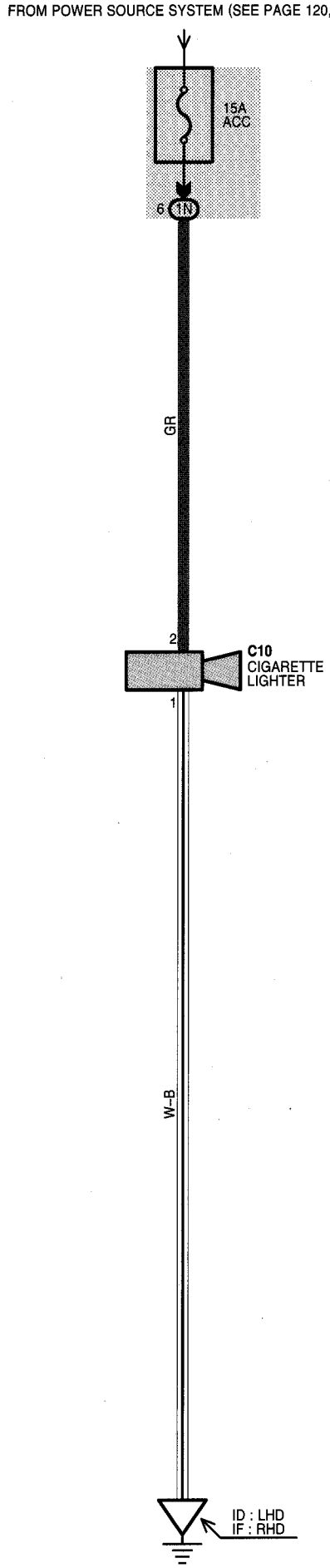

SERVICE HINTS

C10 CIGARETTE LIGHTER

2-GROUND : Approx. **12** volts with the ignition SW at **ACC** or **ON** position
1-GROUND : Always continuity

: PARTS LOCATION

Code	See Page	Code	See Page	Code	See Page
C10	86 (LHD)	C10	92 (RHD)		

: JUNCTION BLOCK AND WIRE HARNESS CONNECTOR

Code	See Page	Junction Block and Wire Harness (Connector Location)
1N	81	Instrument Panel Wire and Instrument Panel J/B (Lower Finish Panel)

: GROUND POINTS

Code	See Page	Ground Points Location
ID	98 (LHD)	Left Kick Panel
IF	106 (RHD)	Right Kick Panel

LIGHT REMINDER BUZZER

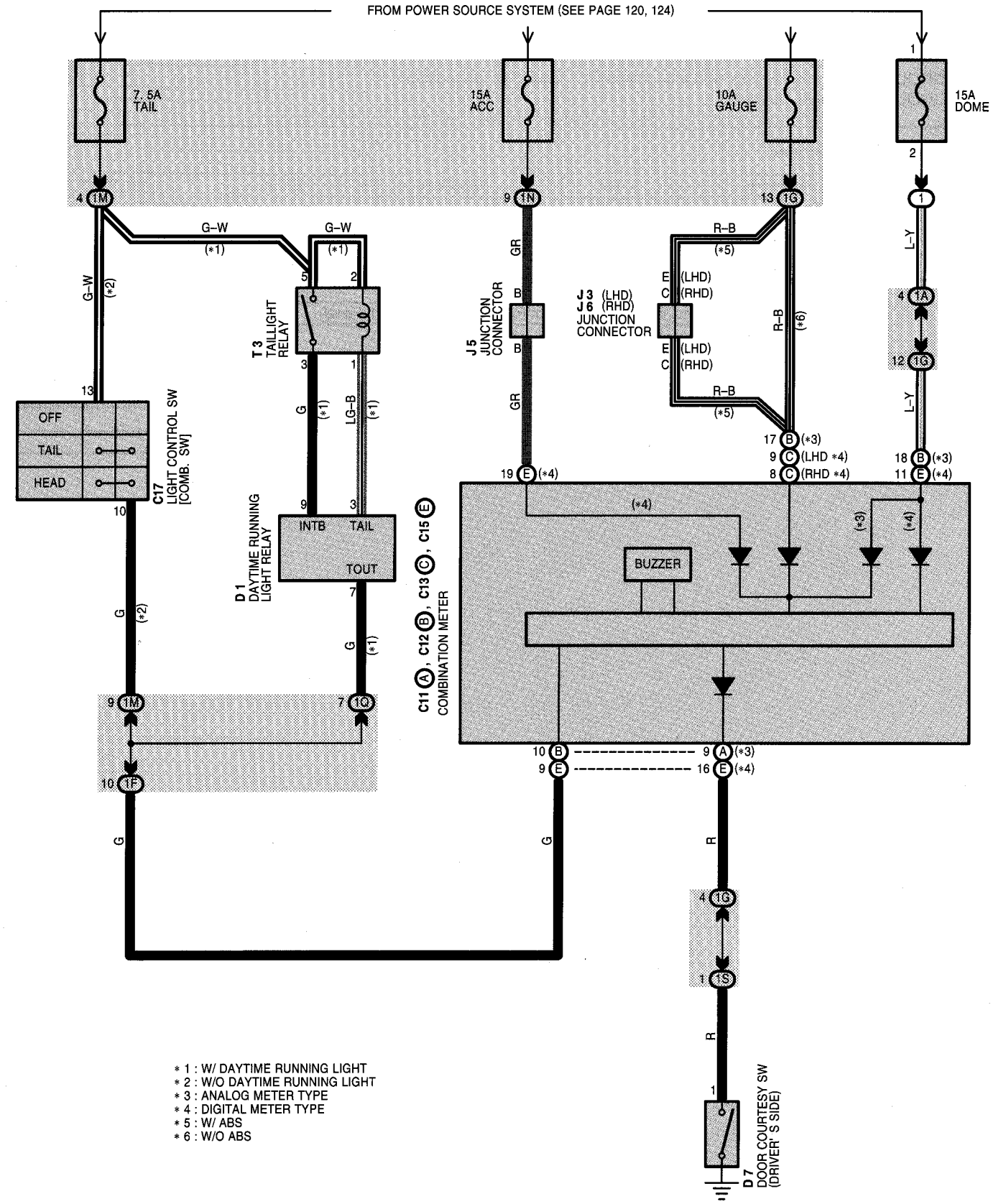

SYSTEM OUTLINE

When the driver's door is opened (Door courtesy SW on) with the light control SW at TAIL or HEAD position, the light reminder buzzer comes on.

SERVICE HINTS

C11 (A), C12 (B), C13 (C), C15 (E) COMBINATION METER

(B)17, (C) 8, (C) 9-GROUND : Approx. **12** volts with ignition SW at **ON** position
(E)19-GROUND : Approx. **12** volts with the ignition SW at **ACC** or **ON** position
(B)10, (E) 9-GROUND : Approx. **12** volts with light control SW at **TAIL** or **HEAD** position
(A) 9, (E)16-GROUND : Continuity with driver's door open

: PARTS LOCATION

Code		See Page	Code		See Page	Code	See Page
C11	A	86 (LHD)	C15	E	92 (RHD)	J5	87 (LHD)
		92 (RHD)	C17		86 (LHD)		93 (RHD)
C12	B	86 (LHD)			92 (RHD)	J6	87 (LHD)
		92 (RHD)	D1		86 (LHD)		93 (RHD)
C13	C	86 (LHD)	D7		88 (LHD)	T3	87 (LHD)
		92 (RHD)			94 (RHD)		
C15	E	86 (LHD)	J3		87 (LHD)		

: RELAY BLOCKS

Code	See Page	Relay Blocks (Relay Block Location)
1	78	Engine Room R/B No.1 (Engine Compartment Left)

: JUNCTION BLOCK AND WIRE HARNESS CONNECTOR

Code	See Page	Junction Block and Wire Harness (Connector Location)
1A	80	Engine Room Main Wire and Instrument Panel J/B (Lower Finish Panel)
1F	81	Instrument Panel Wire and Instrument Panel J/B (Lower Finish Panel)
1G		
1M		
1N		
1Q		
1S	80	Floor Wire and Instrument Panel J/B (Lower Finish Panel)

FRONT WIPER AND WASHER

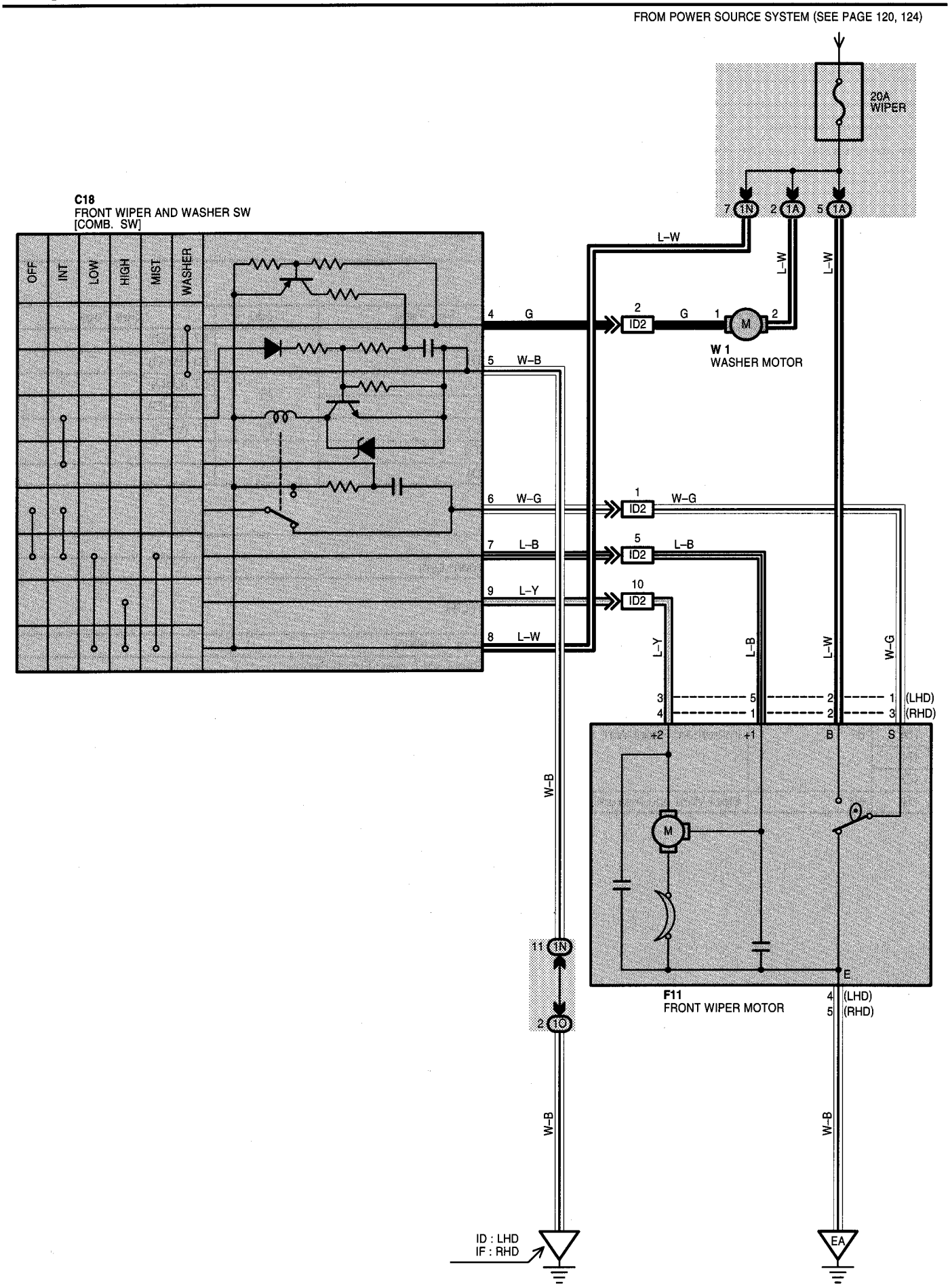

SYSTEM OUTLINE

With the ignition SW turned on, the current flows to TERMINAL 8 of the front wiper and washer SW, TERMINAL 2 of the washer motor and TERMINAL 2 of the front wiper motor through the WIPER fuse.

1. LOW SPEED POSITION

With the front wiper SW turned to LO position, the current flows from TERMINAL 8 of the front wiper and washer SW to TERMINAL 7 to TERMINAL 5 (LHD) or 1 (RHD) of the front wiper motor to TERMINAL 4 (LHD) or 5 (RHD) to GROUND and causes the front wiper motor to run at low speed.

2. HIGH SPEED POSITION

With the front wiper SW turned to HI position, the current flows from TERMINAL 8 of the front wiper and washer SW to TERMINAL 9 to TERMINAL 3 (LHD) or 4 (RHD) of the front wiper motor to TERMINAL 4 (LHD) or 5 (RHD) to GROUND and causes the front wiper motor to run at high speed.

3. INT POSITION

With the front wiper SW turned to INT position, the wiper relay operates and current flows from TERMINAL 8 of the front wiper and washer SW to TERMINAL 5 to GROUND. This activates the intermittent circuit and the current flows from TERMINAL 8 of the front wiper and washer SW to TERMINAL 7 to TERMINAL 5 (LHD) or 1 (RHD) of the front wiper motor to TERMINAL 4 (LHD) or 5 (RHD) to GROUND and the wiper operates. Intermittent operation is controlled by a condenser charge and discharge function in the relay.

4. MIST POSITION

With front wiper SW turn MIST position, the current flows from TERMINAL 8 of the front wiper and washer SW to TERMINAL 5 (LHD) or 1 (RHD) of the front wiper motor to TERMINAL 4 (LHD) or 5 (RHD) to GROUND and causes the front wiper motor to run at low speed.

5. WASHER CONTINUOUS OPERATION

With the washer SW pulled to WASHER position (Washer SW ON position), the current flows from the WIPER fuse to TERMINAL 2 of the washer motor to TERMINAL 1 to TERMINAL 4 of the front wiper and washer SW to TERMINAL 5 to GROUND and causes the washer motor to run and the window washer to spray. Simultaneously, current flows from the WIPER fuse to TERMINAL 8 of the front wiper and washer SW to TERMINAL 7 to TERMINAL 5 (LHD) or 1 (RHD) of the front wiper motor to TERMINAL 4 (LHD) or 5 (RHD) to GROUND, causing the wiper to function.

SERVICE HINTS

C18 FRONT WIPER AND WASHER SW [COMB. SW]

5-GROUND : Always continuity
8-GROUND : Approx. **12** volts with the ignition SW at **ON** position
7-GROUND : Approx. **12** volts with the ignition SW on and the front wiper SW at **LO** or **MIST** position
Approx. **12** volts intermittently with the ignition SW on and the front wiper SW at **INT** position
6-GROUND : Approx. **12** volts with the ignition SW on and unless the front wiper motor at **STOP** position
9-GROUND : Approx. **12** volts with the ignition SW on and the front wiper SW at **HI** position

F11 FRONT WIPER MOTOR

1 (LHD), 3 (RHD)-2 : Closed unless the front wiper motor at **STOP** position

○ : PARTS LOCATION

Code	See Page	Code	See Page	Code	See Page
C18	86 (LHD)	F11	84 (LHD)	W1	85 (LHD)
	92 (RHD)		90 (RHD)		91 (RHD)

: JUNCTION BLOCK AND WIRE HARNESS CONNECTOR

Code	See Page	Junction Block and Wire Harness (Connector Location)
1A	80	Engine Room Main Wire and Instrument Panel J/B (Lower Finish Panel)
1N	81	Instrument Panel Wire and Instrument Panel J/B (Lower Finish Panel)
1O		

□ : CONNECTOR JOINING WIRE HARNESS AND WIRE HARNESS

Code	See Page	Joining Wire Harness and Wire Harness (Connector Location)
ID2	100 (LHD)	Engine Room Main Wire and Instrument Panel Wire (Left Side of Instrument Panel)
	108 (RHD)	Engine Room Main Wire and Instrument Panel Wire (Right Side of Instrument Panel)

FRONT WIPER AND WASHER

▽ : GROUND POINTS

Code	See Page	Ground Points Location
EA	96 (LHD)	Front Right Fender Apron
	104 (RHD)	
ID	98 (LHD)	Left Kick Panel
IF	106 (RHD)	Right Kick Panel

REAR WIPER AND WASHER

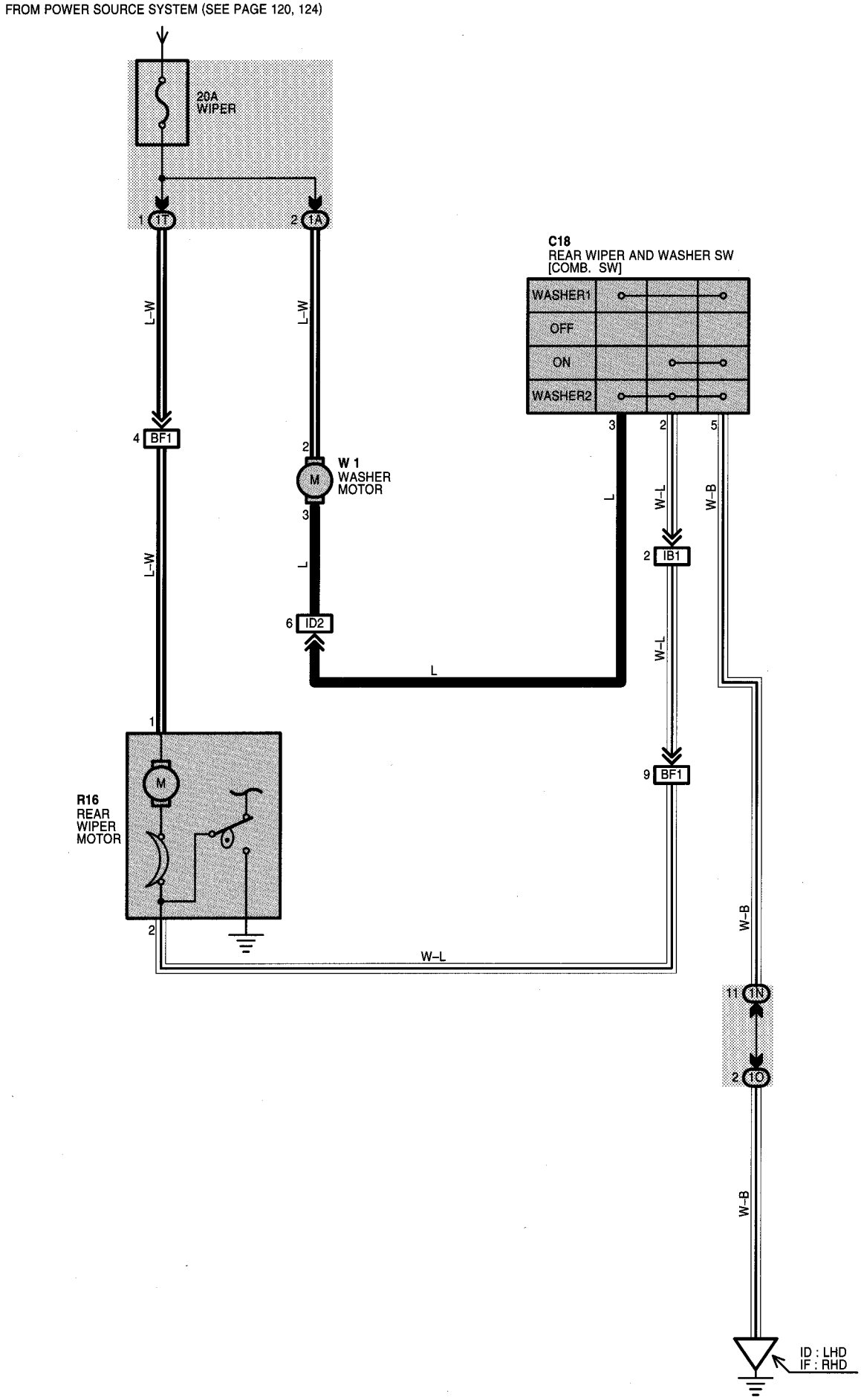

SERVICE HINTS

R16 REAR WIPER MOTOR

1-GROUND : Approx. **12** volts with the ignition SW at **ON** position
2-GROUND : Continuity with washer SW turned on

: PARTS LOCATION

Code	See Page	Code	See Page	Code	See Page
C18	86 (LHD)	R16	89 (LHD)	W1	85 (LHD)
	92 (RHD)		95 (RHD)		91 (RHD)

: JUNCTION BLOCK AND WIRE HARNESS CONNECTOR

Code	See Page	Junction Block and Wire Harness (Connector Location)
1A	80	Engine Room Main Wire and Instrument Panel J/B (Lower Finish Panel)
1N	81	Instrument Panel Wire and Instrument Panel J/B (Lower Finish Panel)
1O		
1T	80	Floor Wire and Instrument Panel J/B (Lower Finish Panel)

: CONNECTOR JOINING WIRE HARNESS AND WIRE HARNESS

Code	See Page	Joining Wire Harness and Wire Harness (Connector Location)
IB1	98 (LHD)	Floor Wire and Instrument Panel Wire (Left Side of Instrument Panel)
	106 (RHD)	Floor Wire and Instrument Panel Wire (Right Side of Instrument Panel)
ID2	100 (LHD)	Engine Room Main Wire and Instrument Panel Wire (Left Side of Instrument Panel)
	108 (RHD)	Engine Room Main Wire and Instrument Panel Wire (Right Side of Instrument Panel)
BF1	102 (LHD)	Back Door No.1 Wire and Floor Wire (Right Side of Back Door)
	110 (RHD)	

: GROUND POINTS

Code	See Page	Ground Points Location
ID	98 (LHD)	Left Kick Panel
IF	106 (RHD)	Right Kick Panel

HORN

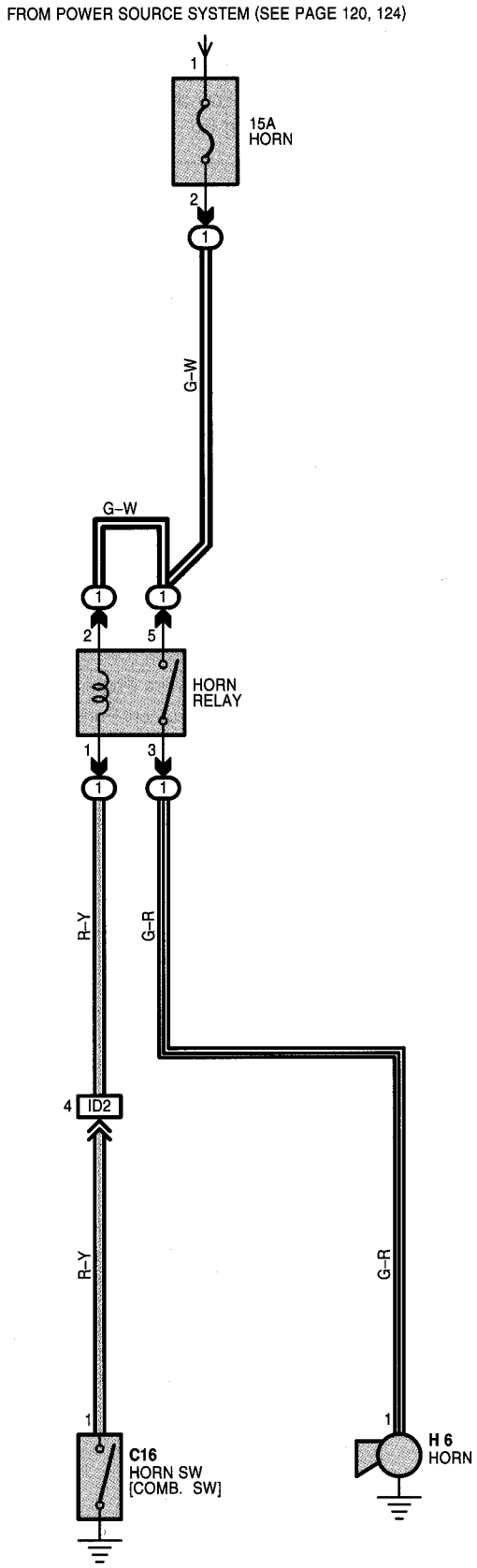
FROM POWER SOURCE SYSTEM (SEE PAGE 120, 124)
1
15A
HORN
2
1
G-W
G-W
1
1
2
5
HORN
RELAY
1
3
1
1
R-Y
G-R
4
ID2
R-Y
G-R
1
1
C16
HORN SW
[COMB. SW]
H 6
HORN

SERVICE HINTS

HORN RELAY

5-3 : Closed with the horn SW at on

○ : PARTS LOCATION

Code	See Page	Code	See Page	Code	See Page
C16	86 (LHD)	H6	85 (LHD)		
	92 (RHD)		91 (RHD)		

⬭ : RELAY BLOCKS

Code	See Page	Relay Blocks (Relay Block Location)
1	78	Engine Room R/B No.1 (Engine Compartment Left)

▭ : CONNECTOR JOINING WIRE HARNESS AND WIRE HARNESS

Code	See Page	Joining Wire Harness and Wire Harness (Connector Location)
ID2	100 (LHD)	Engine Room Main Wire and Instrument Panel Wire (Left Side of Instrument Panel)
	108 (RHD)	Engine Room Main Wire and Instrument Panel Wire (Right Side of Instrument Panel)

DOOR LOCK CONTROL

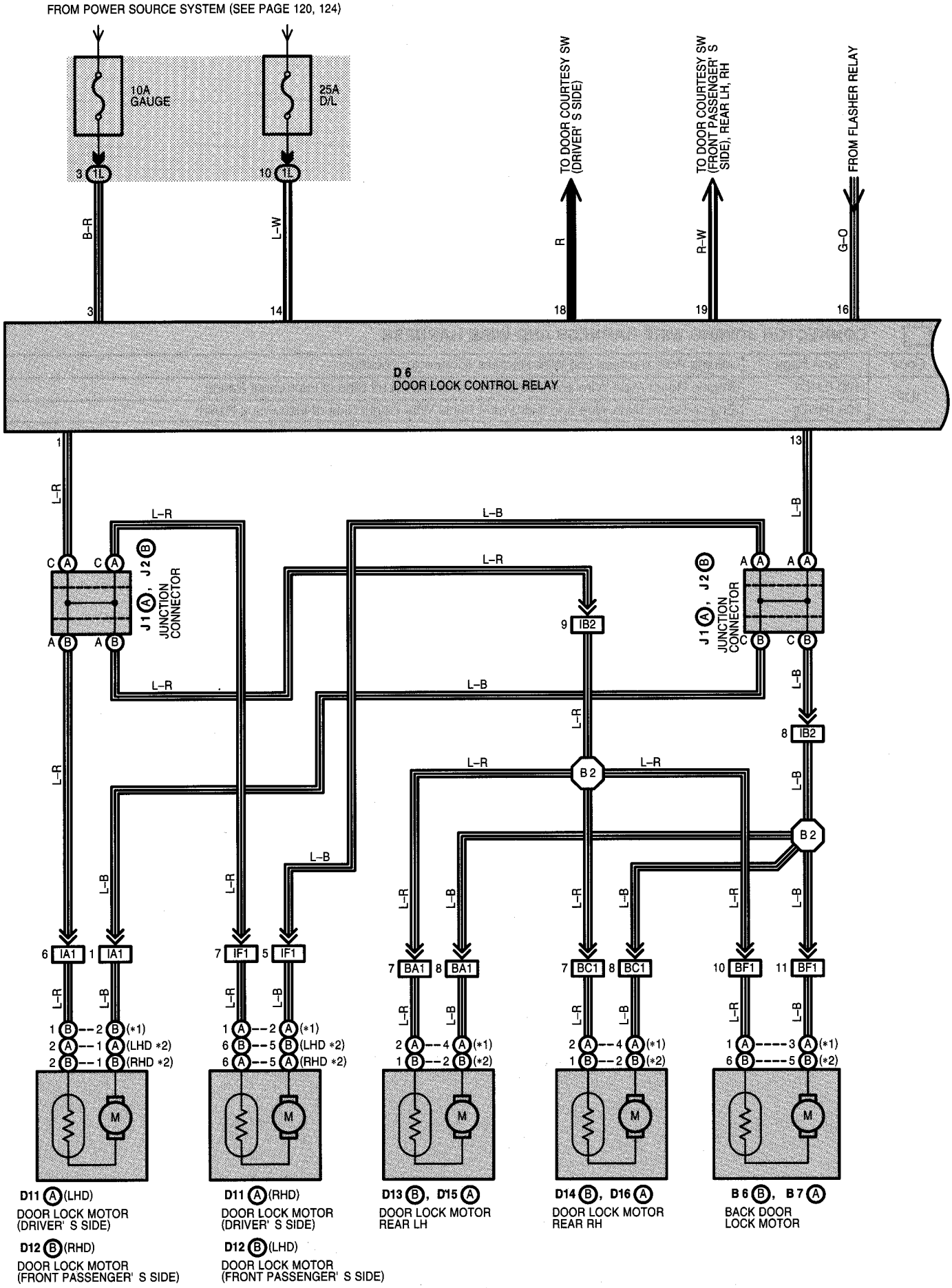

* 1 : W/ DOUBLE LOCKING SYSTEM
* 2 : W/O DOUBLE LOCKING SYSTEM
* 3 : W/ REAR POWER WINDOW
* 4 : W/O REAR POWER WINDOW
* 5 : W/ POWER WINDOW
* 6 : W/O POWER WINDOW

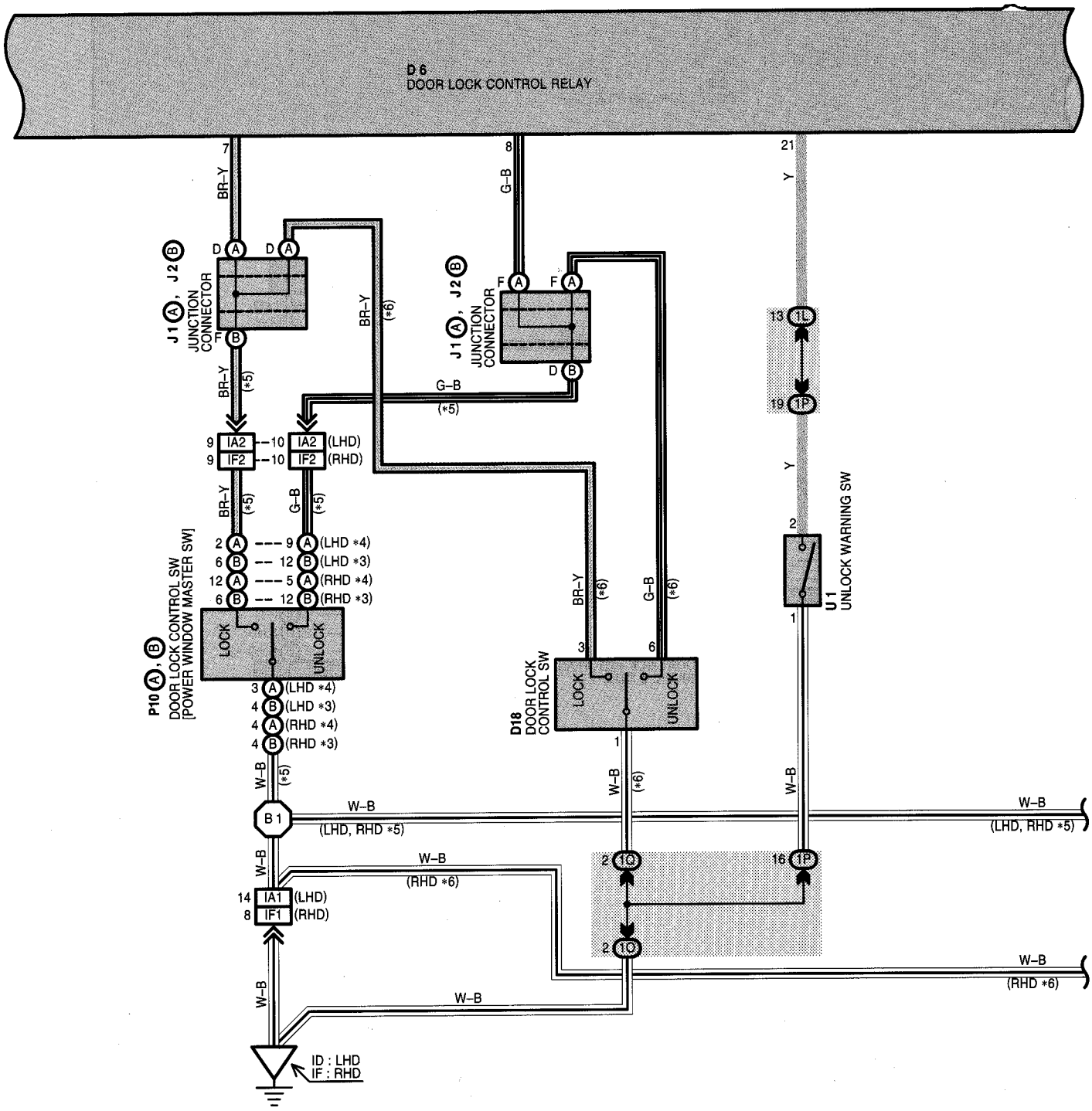

DOOR LOCK CONTROL

* 1 : W/ DOUBLE LOCKING SYSTEM
* 2 : W/O DOUBLE LOCKING SYSTEM
* 5 : W/ POWER WINDOW
* 6 : W/O POWER WINDOW

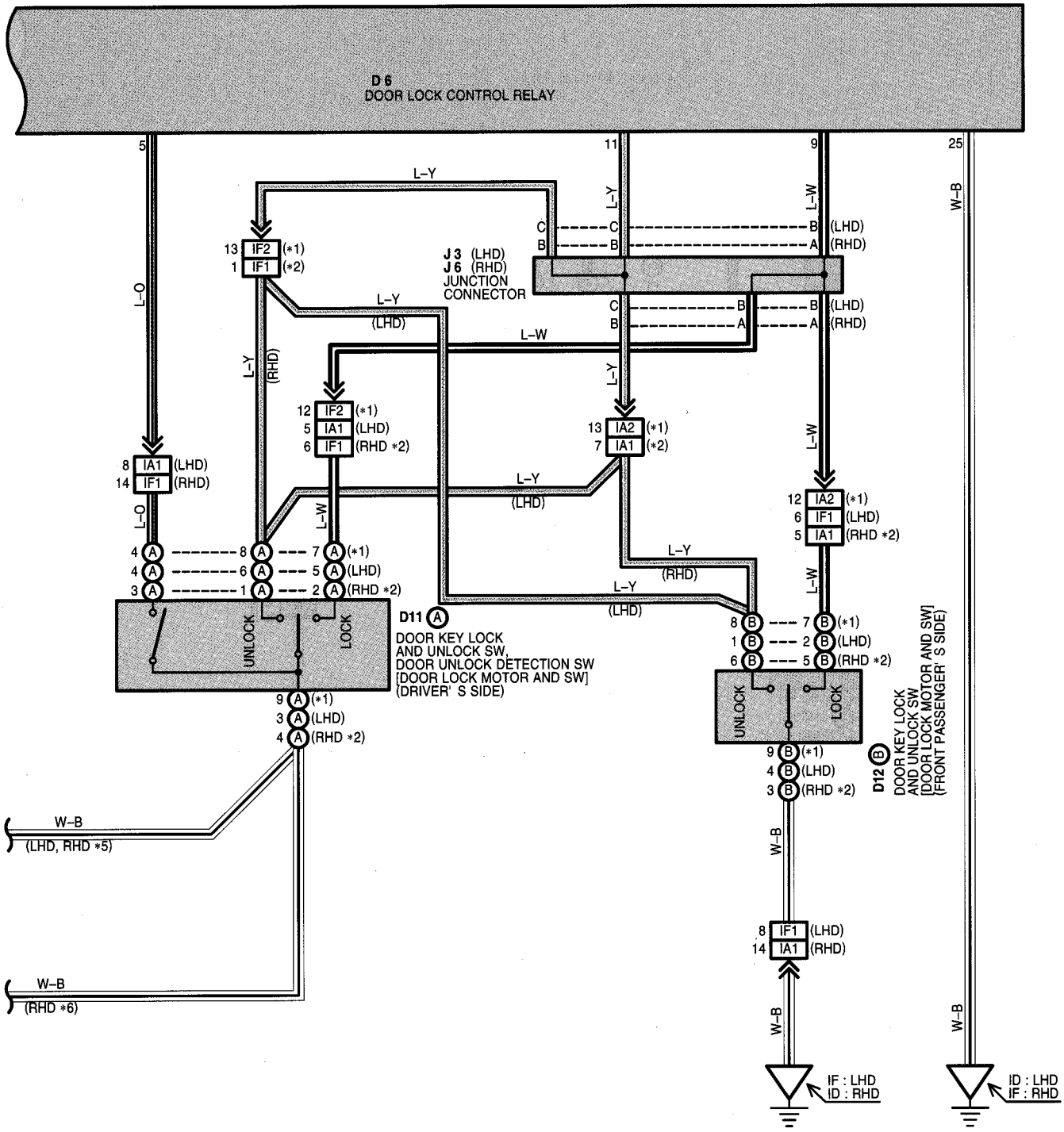

SYSTEM OUTLINE

Current is always flowing from the D/L fuse to door lock control relay TERMINAL 14. When the ignition SW is turned on, the current from the GAUGE fuse flows to the door lock control relay TERMINAL 3.

1. MANUAL LOCK OPERATION

When the door lock control SW or the door key lock and unlock SW is operated to LOCK position, a lock signal is input into the door lock control relay TERMINAL 7 or 9. This activates the relay and the current from the door lock control relay TERMINAL 1 flows through respective motors and then to the door lock control relay TERMINAL 13 to GROUND, thus the door lock motors lock the doors.

2. MANUAL UNLOCK OPERATION

When the door lock control SW or the door key lock and unlock SW is operated to UNLOCK position, a unlock signal is input into the door lock control relay TERMINAL 8 or 11. This activates the relay and the current from the door lock control relay TERMINAL 13 flows through respective motors and then to the door lock control relay TERMINAL 1 to GROUND, thus the door lock motors unlock doors.

SERVICE HINTS

D6 DOOR LOCK CONTROL RELAY

25-GROUND : Always continuity
3-GROUND : Approx. **12** volts with ignition SW at **ON** position
14-GROUND : Always approx. **12** volts
7-GROUND : Continuity with door lock control SW locked
8-GROUND : Continuity with door lock control SW unlocked
9-GROUND : Continuity with driver's, front passenger's door lock cylinder locked with key
11-GROUND : Continuity with driver's, front passenger's door lock cylinder unlocked with key

U1 UNLOCK WARNING SW

1-2 : Closed with ignition key in cylinder

D11 (A) DOOR KEY LOCK AND UNLOCK SW, DOOR UNLOCK DETECTION SW [DOOR LOCK MOTOR AND SW] (DRIVER'S SIDE)

(A) 8-(A) 9 : Closed with door lock cylinder unlocked with key (w/ double locking system)
(A) 6-(A) 3 : Closed with door lock cylinder unlocked with key (LHD)
(A) 1-(A) 4 : Closed with door lock cylinder unlocked with key (RHD w/o double locking system)
(A) 7-(A) 9 : Closed with door lock cylinder locked with key (w/ double locking system)
(A) 5-(A) 3 : Closed with door lock cylinder locked with key (LHD)
(A) 2-(A) 4 : Closed with door lock cylinder locked with key (RHD w/o double locking system)

: PARTS LOCATION

Code		See Page	Code		See Page	Code		See Page
B6	B	88 (LHD)	D13	B	94 (RHD)	J2	B	93 (RHD)
		94 (RHD)	D14	B	88 (LHD)	J3		87 (LHD)
B7	A	94 (RHD)			94 (RHD)	J6		87 (LHD)
D6		86 (LHD)	D15	A	94 (RHD)			93 (RHD)
		92 (RHD)	D16	A	94 (RHD)	P10	A	89 (LHD)
D11	A	88 (LHD)	D18		86 (LHD)			95 (RHD)
		94 (RHD)			92 (RHD)		B	89 (LHD)
D12	B	88 (LHD)	J1	A	87 (LHD)			95 (RHD)
		94 (RHD)			93 (RHD)	U1		87 (LHD)
D13	B	88 (LHD)	J2	B	87 (LHD)			93 (RHD)

: JUNCTION BLOCK AND WIRE HARNESS CONNECTOR

Code	See Page	Junction Block and Wire Harness (Connector Location)
1L	81	Instrument Panel Wire and Instrument Panel J/B (Lower Finish Panel)
1O		
1P		
1Q		

DOOR LOCK CONTROL

: CONNECTOR JOINING WIRE HARNESS AND WIRE HARNESS

Code	See Page	Joining Wire Harness and Wire Harness (Connector Location)
IA1	98 (LHD)	Front Door LH Wire and Instrument Panel Wire (Left Kick Panel)
	106 (RHD)	
IA2	98 (LHD)	
	106 (RHD)	
IB2	98 (LHD)	Floor Wire and Instrument Panel Wire (Left Side of Instrument Panel)
	106 (RHD)	Floor Wire and Instrument Panel Wire (Right Side of Instrument Panel)
IF1	100 (LHD)	Front Door RH Wire and Instrument Panel Wire (Right Kick Panel)
	108 (RHD)	
IF2	100 (LHD)	
	108 (RHD)	
BA1	102 (LHD)	Rear Door LH Wire and Floor Wire (Under the Left Center Pillar)
	110 (RHD)	
BC1	102 (LHD)	Rear Door RH Wire and Floor Wire (Under the Right Center Pillar)
	110 (RHD)	
BF1	102 (LHD)	Back Door No.1 Wire and Floor Wire (Right Side of Back Door)
	110 (RHD)	

: GROUND POINTS

Code	See Page	Ground Points Location
ID	98 (LHD)	Left Kick Panel
	106 (RHD)	
IF	98 (LHD)	Right Kick Panel
	106 (RHD)	

: SPLICE POINTS

Code	See Page	Wire Harness with Splice Points	Code	See Page	Wire Harness with Splice Points
B1	102 (LHD)	Front Door LH Wire	B2	102 (LHD)	Floor Wire
	110 (RHD)	Front Door RH Wire		110 (RHD)	

WIRELESS DOOR LOCK CONTROL

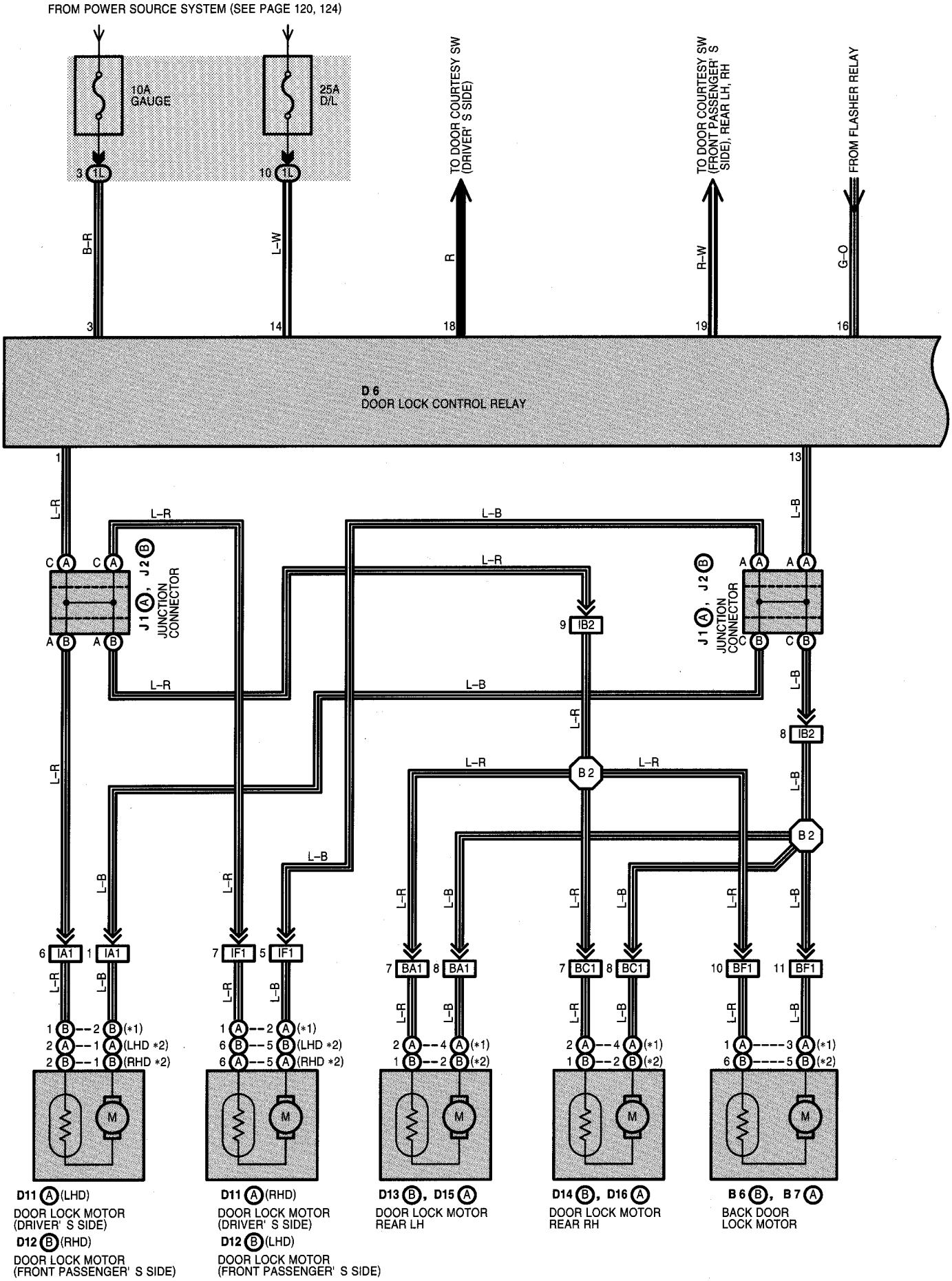

* 1 : W/ DOUBLE LOCKING SYSTEM
* 2 : W/O DOUBLE LOCKING SYSTEM
* 3 : W/ REAR POWER WINDOW
* 4 : W/O REAR POWER WINDOW
* 5 : W/ POWER WINDOW
* 6 : W/O POWER WINDOW

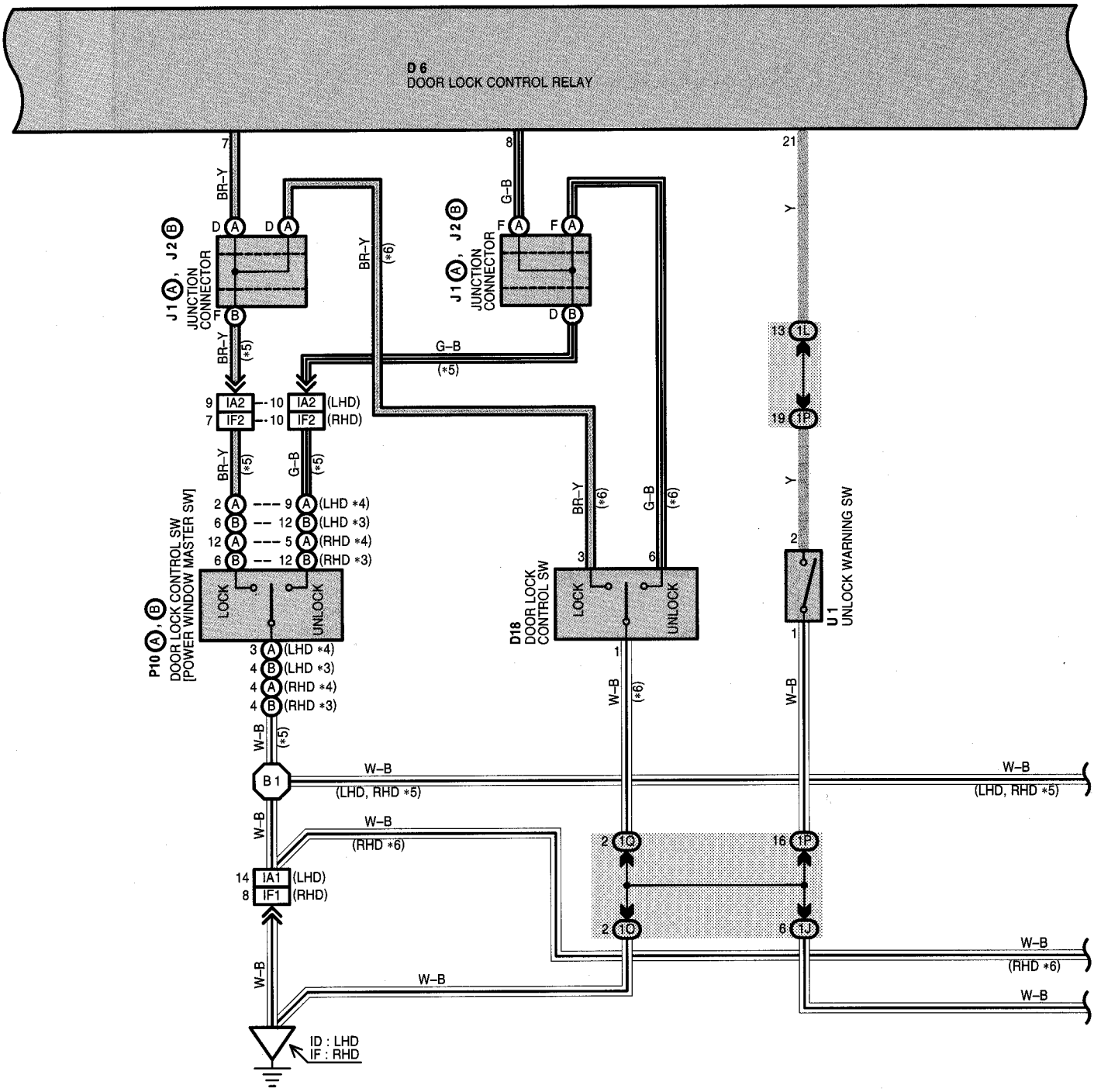

WIRELESS DOOR LOCK CONTROL

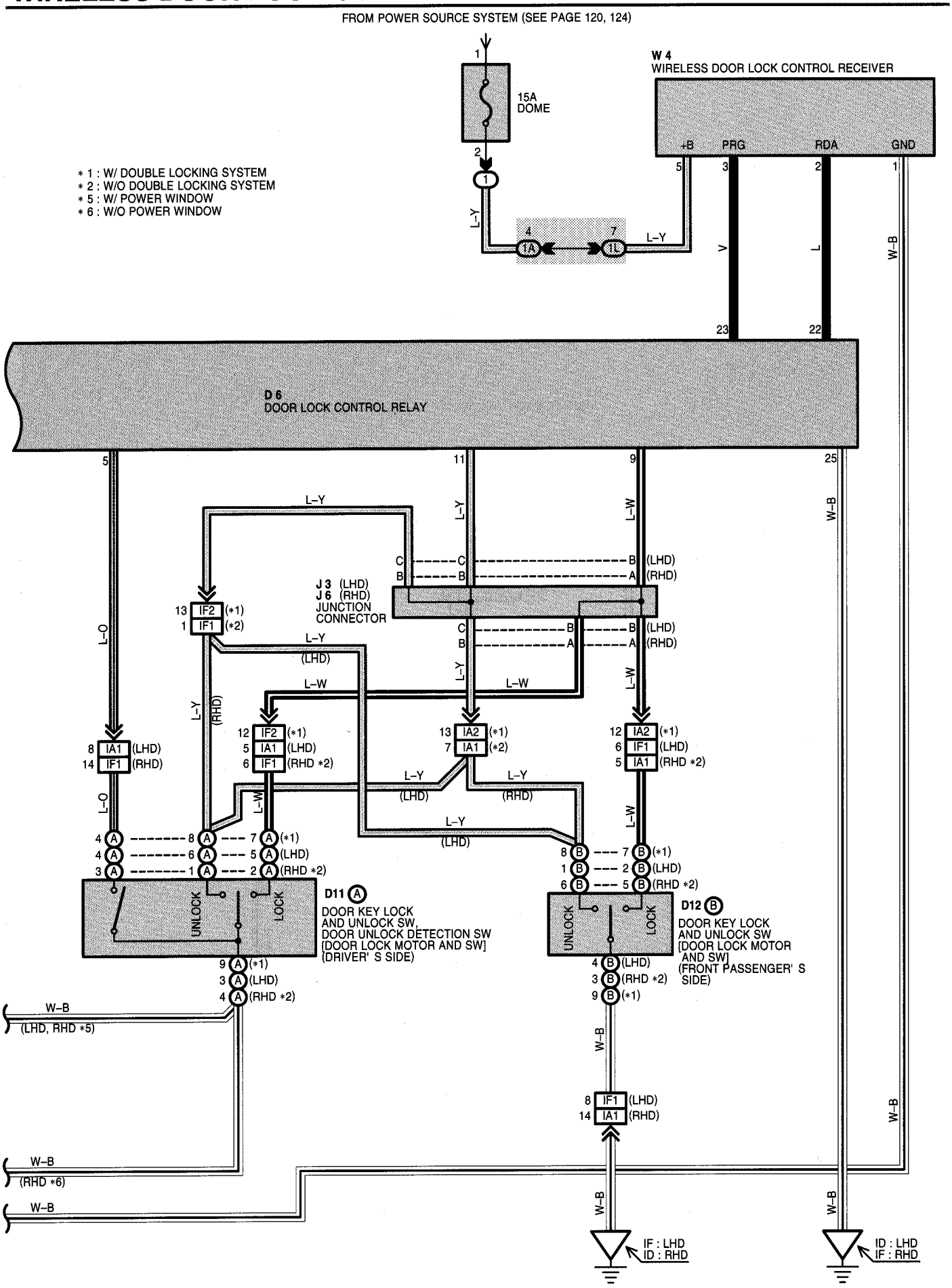

SYSTEM OUTLINE

Door lock control (Lock and unlock) is performed by remote control, without the ignition key inserted in the door key cylinder, using low-power electrical waves emitted by a transmitter.

1. WIRELESS DOOR LOCK OR UNLOCK NORMAL OPERATION

With the ignition key not inserted into the ignition key cylinder (Unlock warning SW off) and all the doors completely closed, when the lock or unlock button (Transmitter) is pushed, the wireless door lock control receiver receives the electrical waves from the transmitter, and sends a signal to the door lock control relay causing it to operate.
As a result, the door lock control relay judges whether the door is locked or unlocked based on the signal from the door lock motor and door unlock detection SW, and sends a signal to switch the condition from lock to unlock or vice versa, causing the door lock motor to operate.

2. VISUAL CONFIRMATION OF LOCK OR UNLOCK

If all doors indicate that they are locked after the lock command, hazard lights will flash once. If any door indicates that it is open after the unlock command, hazard lights will flash twice.

3. AUTOMATIC LOCK OPERATION

With the ignition key not inserted into the ignition key cylinder (Unlock warning SW off) and all the doors completely closed, after pushing the button (Transmitter) to unlock all the doors, if a door is not opened within 30 seconds, all the doors will be automatically relocked.

4. WIRELESS CONTROL STOP FUNCTION

If a door is open (Door courtesy SW on), a signal is input from the door courtesy SW to the door lock control relay stopping wireless door lock or unlock.
If the ignition key is in the ignition key cylinder (Unlock warning SW on), the unlock warning SW inputs a signal to the door lock control relay stopping wireless door lock or unlock.

5. REPEAT FUNCTION

In case an appropriate lock detection signal is not received after outputting a lock signal when pushing the lock button (Transmitter), the door lock control relay output the lock signal 2 seconds later.

SERVICE HINTS

U1 UNLOCK WARNING SW

2-1 : Closed with the ignition key in the cylinder

W4 WIRELESS DOOR LOCK CONTROL RECEIVER

5-GROUND : Always approx. **12** volts
1-GROUND : Always continuity

○ : PARTS LOCATION

Code		See Page	Code		See Page	Code		See Page
B6	B	88 (LHD)	D14	B	88 (LHD)	J6		87 (LHD)
		94 (RHD)			94 (RHD)			93 (RHD)
B7	A	94 (RHD)	D15	A	94 (RHD)	P10	A	89 (LHD)
D6		86 (LHD)	D16	A	94 (RHD)			95 (RHD)
		92 (RHD)	D18		86 (LHD)		B	89 (LHD)
D11	A	88 (LHD)			92 (RHD)			95 (RHD)
		94 (RHD)	J1	A	87 (LHD)	U1		87 (LHD)
D12	B	88 (LHD)			93 (RHD)			93 (RHD)
		94 (RHD)	J2	B	87 (LHD)	W4		87 (LHD)
D13	B	88 (LHD)			93 (RHD)			93 (RHD)
		94 (RHD)	J3		87 (LHD)			

▭ : RELAY BLOCKS

Code	See Page	Relay Blocks (Relay Block Location)
1	78	Engine Room R/B No.1 (Engine Compartment Left)

WIRELESS DOOR LOCK CONTROL

: JUNCTION BLOCK AND WIRE HARNESS CONNECTOR

Code	See Page	Junction Block and Wire Harness (Connector Location)
1A	80	Engine Room Main Wire and Instrument Panel J/B (Lower Finish Panel)
1J	81	Instrument Panel Wire and Instrument Panel J/B (Lower Finish Panel)
1L		
1O		
1P		
1Q		

: CONNECTOR JOINING WIRE HARNESS AND WIRE HARNESS

Code	See Page	Joining Wire Harness and Wire Harness (Connector Location)
IA1	98 (LHD)	Front Door LH Wire and Instrument Panel Wire (Left Kick Panel)
	106 (RHD)	
IA2	98 (LHD)	
	106 (RHD)	
IB2	98 (LHD)	Floor Wire and Instrument Panel Wire (Left Side of Instrument Panel)
	106 (RHD)	Floor Wire and Instrument Panel Wire (Right Side of Instrument Panel)
IF1	100 (LHD)	Front Door RH Wire and Instrument Panel Wire (Right Kick Panel)
	108 (RHD)	
IF2	100 (LHD)	
	108 (RHD)	
IG1	100 (LHD)	Instrument Panel Wire and Clock Wire (Behind the Instrument Panel Center)
	108 (RHD)	
BA1	102 (LHD)	Rear Door LH Wire and Floor Wire (Under the Left Center Pillar)
	110 (RHD)	
BC1	102 (LHD)	Rear Door RH Wire and Floor Wire (Under the Right Center Pillar)
	110 (RHD)	
BF1	102 (LHD)	Back Door No.1 Wire and Floor Wire (Right Side of Back Door)
	110 (RHD)	

: GROUND POINTS

Code	See Page	Ground Points Location
ID	98 (LHD)	Left Kick Panel
	106 (RHD)	
IF	98 (LHD)	Right Kick Panel
	106 (RHD)	

: SPLICE POINTS

Code	See Page	Wire Harness with Splice Points	Code	See Page	Wire Harness with Splice Points
B1	102 (LHD)	Front Door LH Wire	B2	102 (LHD)	Floor Wire
	110 (RHD)	Front Door RH Wire		110 (RHD)	

DOUBLE LOCKING

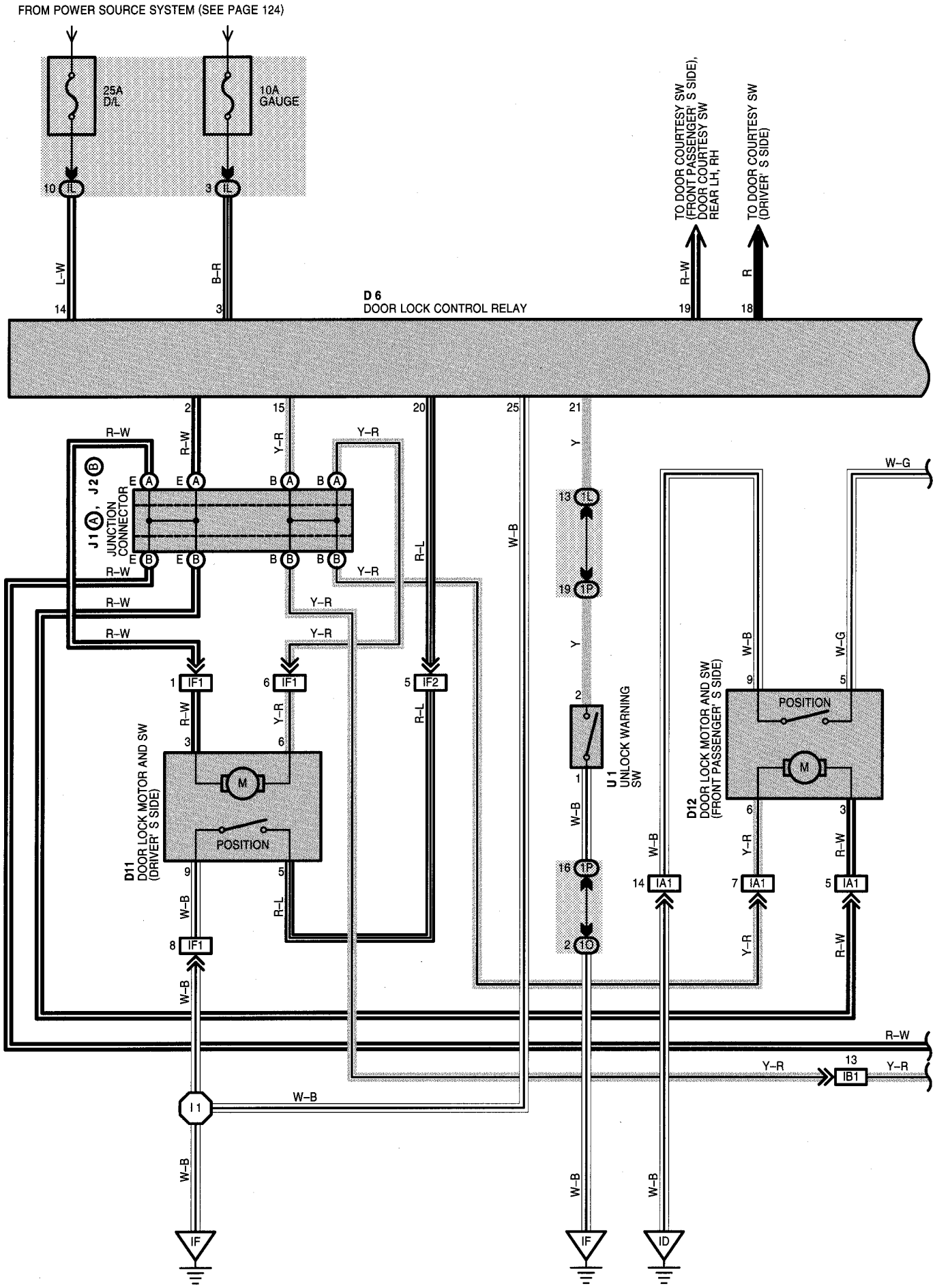

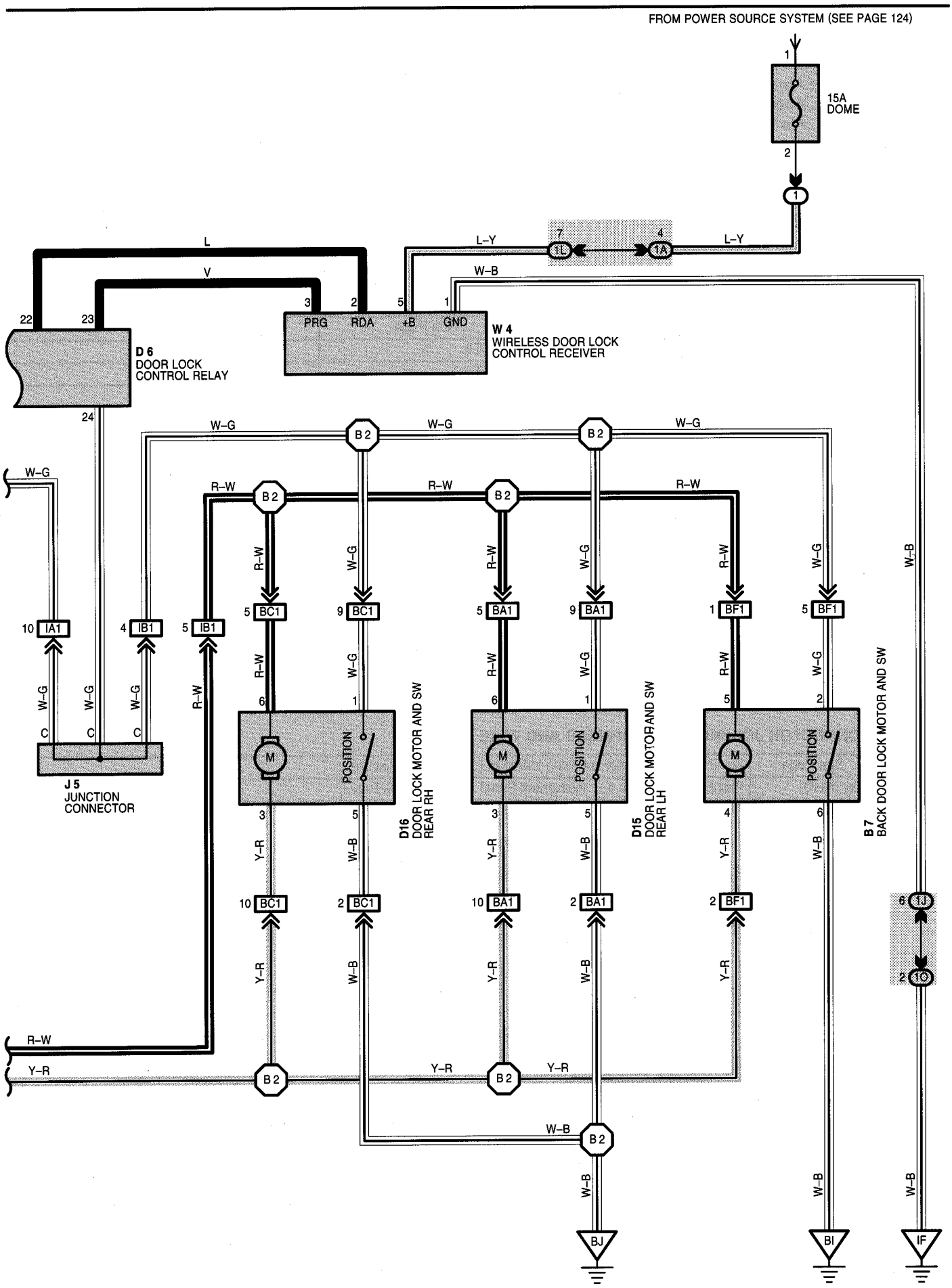
FROM POWER SOURCE SYSTEM (SEE PAGE 124)
15A
DOME
D 6
DOOR LOCK
CONTROL RELAY
W 4
WIRELESS DOOR LOCK
CONTROL RECEIVER
PRG
RDA
+B
GND
J 5
JUNCTION
CONNECTOR
D16
DOOR LOCK MOTOR AND SW
REAR RH
D15
DOOR LOCK MOTOR AND SW
REAR LH
B 7
BACK DOOR LOCK MOTOR AND SW
POSITION
M

DOUBLE LOCKING

SYSTEM OUTLINE

D6 DOOR LOCK CONTROL RELAY

14-GROUND : Always approx. **12** volts
3-GROUND : Approx. **12** volts with the ignition SW at **ON** position
25-GROUND : Always continuity

W4 WIRELESS DOOR LOCK CONTROL RECEIVER

5-GROUND : Always approx. **12** volts
1-GROUND : Always continuity

U1 UNLOCK WARNING SW

1-2 : Closed with the ignition key in cylinder

: PARTS LOCATION

Code	See Page	Code	See Page	Code	See Page
B7	94 (RHD)	D15	94 (RHD)	J5	93 (RHD)
D6	92 (RHD)	D16	94 (RHD)	U1	93 (RHD)
D11	94 (RHD)	J1 A	93 (RHD)	W4	93 (RHD)
D12	94 (RHD)	J2 B	93 (RHD)		

: RELAY BLOCKS

Code	See Page	Relay Blocks (Relay Block Location)
1	78	Engine Room R/B No.1 (Engine Compartment Left)

: JUNCTION BLOCK AND WIRE HARNESS CONNECTOR

Code	See Page	Junction Block and Wire Harness (Connector Location)
1A	80	Engine Room Main Wire and Instrument Panel J/B (Lower Finish Panel)
1J	81	Instrument Panel Wire and Instrument Panel J/B (Lower Finish Panel)
1L		
1O		
1P		

: CONNECTOR JOINING WIRE HARNESS AND WIRE HARNESS

Code	See Page	Joining Wire Harness and Wire Harness (Connector Location)
IA1	106 (RHD)	Front Door LH Wire and Instrument Panel Wire (Left Kick Panel)
IB1	106 (RHD)	Floor Wire and Instrument Panel Wire (Right Side of Instrument Panel)
IF1	108 (RHD)	Front Door RH Wire and Instrument Panel Wire (Right Kick Panel)
IF2		
BA1	110 (RHD)	Rear Door LH Wire and Floor Wire (Under the Left Center Pillar)
BC1	110 (RHD)	Rear Door RH Wire and Floor Wire (Under the Right Center Pillar)
BF1	110 (RHD)	Back Door No.1 Wire and Floor Wire (Right Side of Back Door)

: GROUND POINTS

Code	See Page	Ground Points Location
ID	106 (RHD)	Left Kick Panel
IF	106 (RHD)	Right Kick Panel
BI	110 (RHD)	Right Side of Back Door
BJ	110 (RHD)	Right Rear Side Quarter Panel

: SPLICE POINTS

Code	See Page	Wire Harness with Splice Points	Code	See Page	Wire Harness with Splice Points
I1	108 (RHD)	Instrument Panel Wire	B2	110 (RHD)	Floor Wire

POWER WINDOW (LHD)

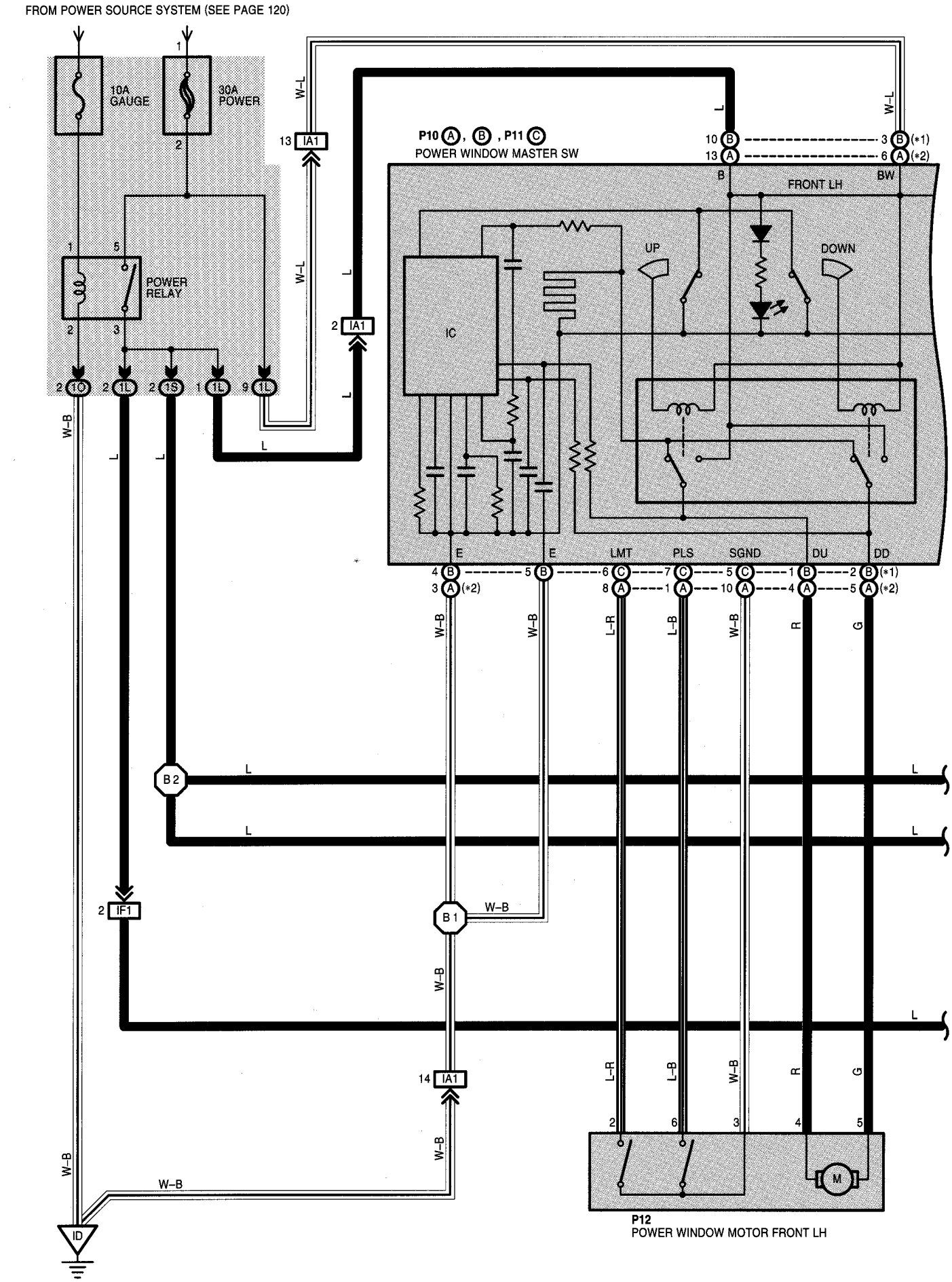

* 1 : W/ REAR POWER WINDOW
* 2 : W/O REAR POWER WINDOW

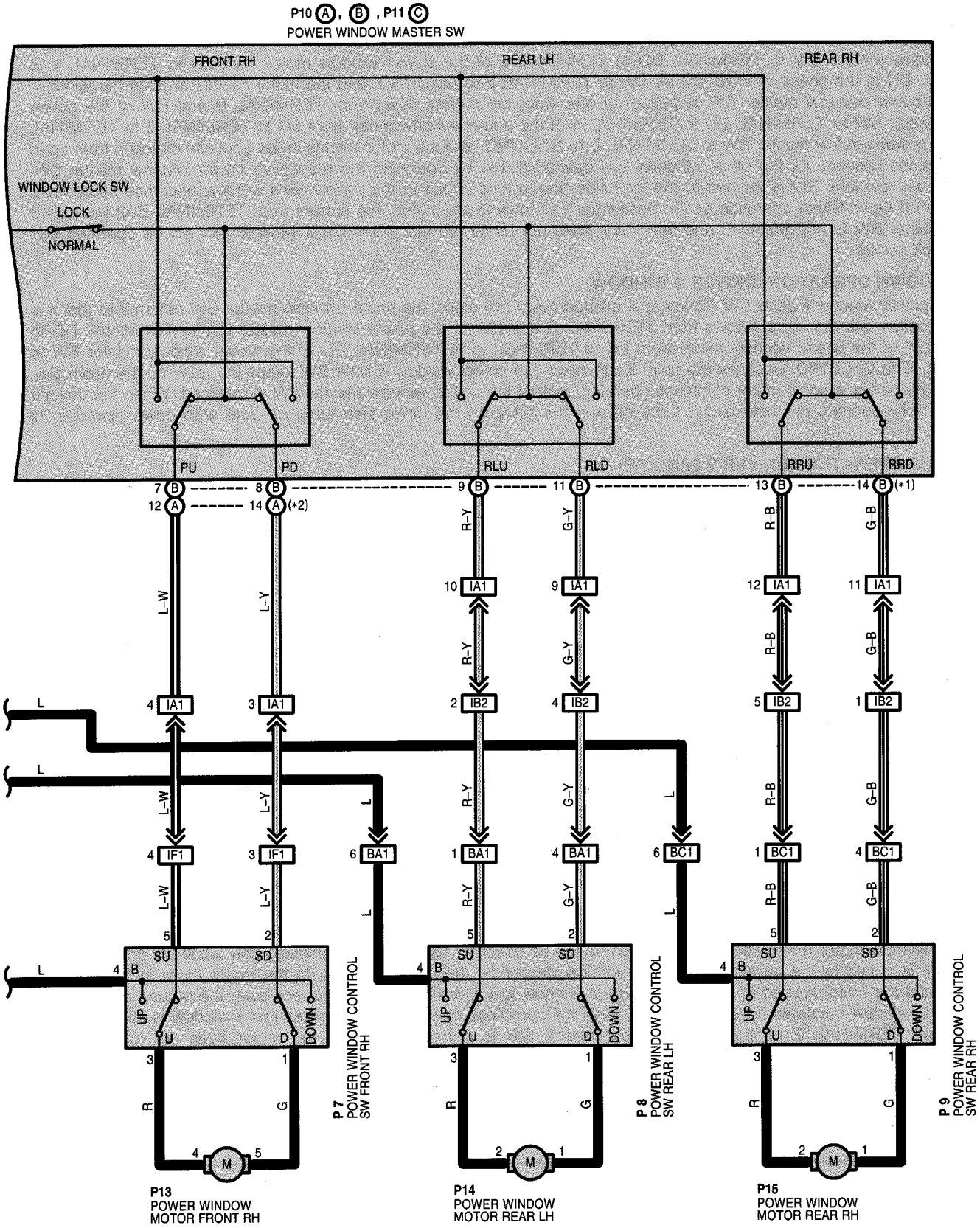

POWER WINDOW (LHD)

SYSTEM OUTLINE

When the ignition SW is turned on, the current flows from the GAUGE fuse through the POWER relay to GROUND, thus the POWER relay is turned on and the current flows through the POWER fuse to TERMINAL 5 of the POWER relay to TERMINAL 3 to TERMINAL B of the power window master SW and TERMINAL B of the power window control SW front RH, Rear LH and RH.

1. MANUAL OPERATION (POWER WINDOW MASTER SW)

When the power window master SW (Driver's) is pushed down one step, the current flows from TERMINAL B and BW of the power window master SW to TERMINAL DD to TERMINAL 5 of the power window motor front LH to TERMINAL 4 to TERMINAL DU of the power window master SW to TERMINAL E to GROUND, and the motor rotates to open the window. When the power window master SW is pulled up one step, the current flows from TERMINAL B and BW of the power window master SW to TERMINAL DU to TERMINAL 4 of the power window motor front LH to TERMINAL 5 to TERMINAL DD of the power window master SW to TERMINAL E to GROUND, and the motor rotates in the opposite direction from open and closes the window. All the other windows are opened/closed by operating the respective power window master SW. When the window lock SW is pushed to the lock side, the ground circuit to the passenger's window becomes open. As a result, even if Open/Close operation of the passenger's window is attempted, the current from TERMINAL E of the power window master SW is not grounded and the motor does not rotate, so the passenger's window can not be operated and window lock occurs.

2. AUTO DOWN OPERATION (DRIVER'S WINDOW)

When the power window master SW (Driver's) is pushed down two steps, the power window master SW determines that it is AUTO operation and the current flows from TERMINAL B and BW of the power window master SW to TERMINAL DD to TERMINAL 5 of the power window motor front LH to TERMINAL 4 to TERMINAL DU of the power window master SW to TERMINAL E to GROUND. Because the hold circuit inside the power window master SW keeps the relay on the down side activated, the power window motor continues operating even if the power window master SW is released. When the driver's window is fully opened, the hold circuit turns off and the relay on the down side turns off, and auto down operation is completed.

3. AUTO UP OPERATION (DRIVER'S WINDOW)

When the power window master SW (Driver's) is pulled up two steps, the power window master SW determines that it is AUTO operation and the current flows from TERMINAL B and BW of the power window master SW to TERMINAL DU to TERMINAL 4 of the power window motor front LH to TERMINAL 5 to TERMINAL DD of the power window master SW to TERMINAL E to GROUND. Because the hold circuit inside the power window master SW keeps the relay on the up side activated, the power window motor continues operating even if the power window master SW is released. When the driver's window is closed, the hold circuit turns off and the relay on the up side turns off, and auto up operation is completed.

4. STOPPING OF AUTO DOWN OPERATION (DRIVER'S WINDOW)

When the power window master SW (Driver's) is pulled to the up side during auto down operation, a ground circuit opens in the power window master SW and current does not flow from TERMINAL DU of the power window master SW to TERMINAL E, so the motor stops, causing auto down operation to stop. If the power window master SW is pulled continuously, the motor rotates in the up direction in manual up operation.

5. STOPPING OF AUTO UP OPERATION (DRIVER'S WINDOW)

When the power window master SW (Driver's) is pushed to the down side during auto up operation, a ground circuit opens in the power window master SW and current does not flow from TERMINAL DD of the power window master SW to TERMINAL E, so the motor stops, causing auto up operation to stop. If the power window master SW is pushed continuously, the motor rotates in the down direction in manual down operation.

6. MANUAL OPERATION (POWER WINDOW CONTROL SW FRONT RH, REAR LH AND RH)

With the power window control SW (Front RH, rear LH or RH) pulled to the up side, current flows from TERMINAL B of the power window control SW to TERMINAL U to power window motor to TERMINAL D of the power window control SW to TERMINAL SD to TERMINAL PD, RLD or RRD of the power window master SW to TERMINAL E to GROUND and rotates the power window motor (Front RH, rear LH or RH) in the up direction. Up operation continues only while the power window control SW is pulled to the up side. When the window descends, the current flowing to the motor flows in the opposite direction, and the motor rotates in reverse. When the window lock SW is pushed to the lock side, the ground circuit to the passenger's window becomes open. As a result, even if Open/Close operation of the passenger's window is attempted, the current from TERMINAL E of the power window master SW is not grounded and the motor does not rotate, so the passenger's window can not be operated and window lock occurs.

7. CAUGHT PREVENTION OPERATION (DRIVER'S WINDOW)

At the time of one-touch automatic up operation, if foreign object is caught between a window frame and a glass, the glass rise will stop and reverse to descend.

SERVICE HINTS

P10 (A), (B) POWER WINDOW MASTER SW

(A) 6, (B) 3-GROUND : Always approx. **12** volts
(A)13, (B)10-GROUND : Approx. **12** volts with the ignition SW at **ON** position
(A) 3, (B) 4, (B) 5-GROUND : Always continuity
(A) 4, (B) 1-GROUND : Approx. **12** volts with the ignition SW on and the master SW (Driver's window) at **UP** or **AUTO UP** position
(A) 5, (B) 2-GROUND : Approx. **12** volts with the ignition SW on and the master SW (Driver's window) at **DOWN** or **AUTO DOWN** position

WINDOW LOCK SW

Open with the window lock SW at **LOCK** position

○ : PARTS LOCATION

Code		See Page	Code		See Page	Code	See Page
P7		89 (LHD)	P10	B	89 (LHD)	P14	89 (LHD)
P8		89 (LHD)	P11	C	89 (LHD)	P15	89 (LHD)
P9		89 (LHD)	P12		89 (LHD)		
P10	A	89 (LHD)	P13		89 (LHD)		

: JUNCTION BLOCK AND WIRE HARNESS CONNECTOR

Code	See Page	Junction Block and Wire Harness (Connector Location)
1L	81	Instrument Panel Wire and Instrument Panel J/B (Lower Finish Panel)
1O		
1S	80	Floor Wire and Instrument Panel J/B (Lower Finish Panel)

: CONNECTOR JOINING WIRE HARNESS AND WIRE HARNESS

Code	See Page	Joining Wire Harness and Wire Harness (Connector Location)
IA1	98 (LHD)	Front Door LH Wire and Instrument Panel Wire (Left Kick Panel)
IB2	98 (LHD)	Floor Wire and Instrument Panel Wire (Left Side of Instrument Panel)
IF1	100 (LHD)	Front Door RH Wire and Instrument Panel Wire (Right Kick Panel)
BA1	102 (LHD)	Rear Door LH Wire and Floor Wire (Under the Left Center Pillar)
BC1	102 (LHD)	Rear Door RH Wire and Floor Wire (Under the Right Center Pillar)

▽ : GROUND POINTS

Code	See Page	Ground Points Location
ID	98 (LHD)	Left Kick Panel

: SPLICE POINTS

Code	See Page	Wire Harness with Splice Points	Code	See Page	Wire Harness with Splice Points
B1	102 (LHD)	Front Door LH Wire	B2	102 (LHD)	Floor Wire

POWER WINDOW (RHD)

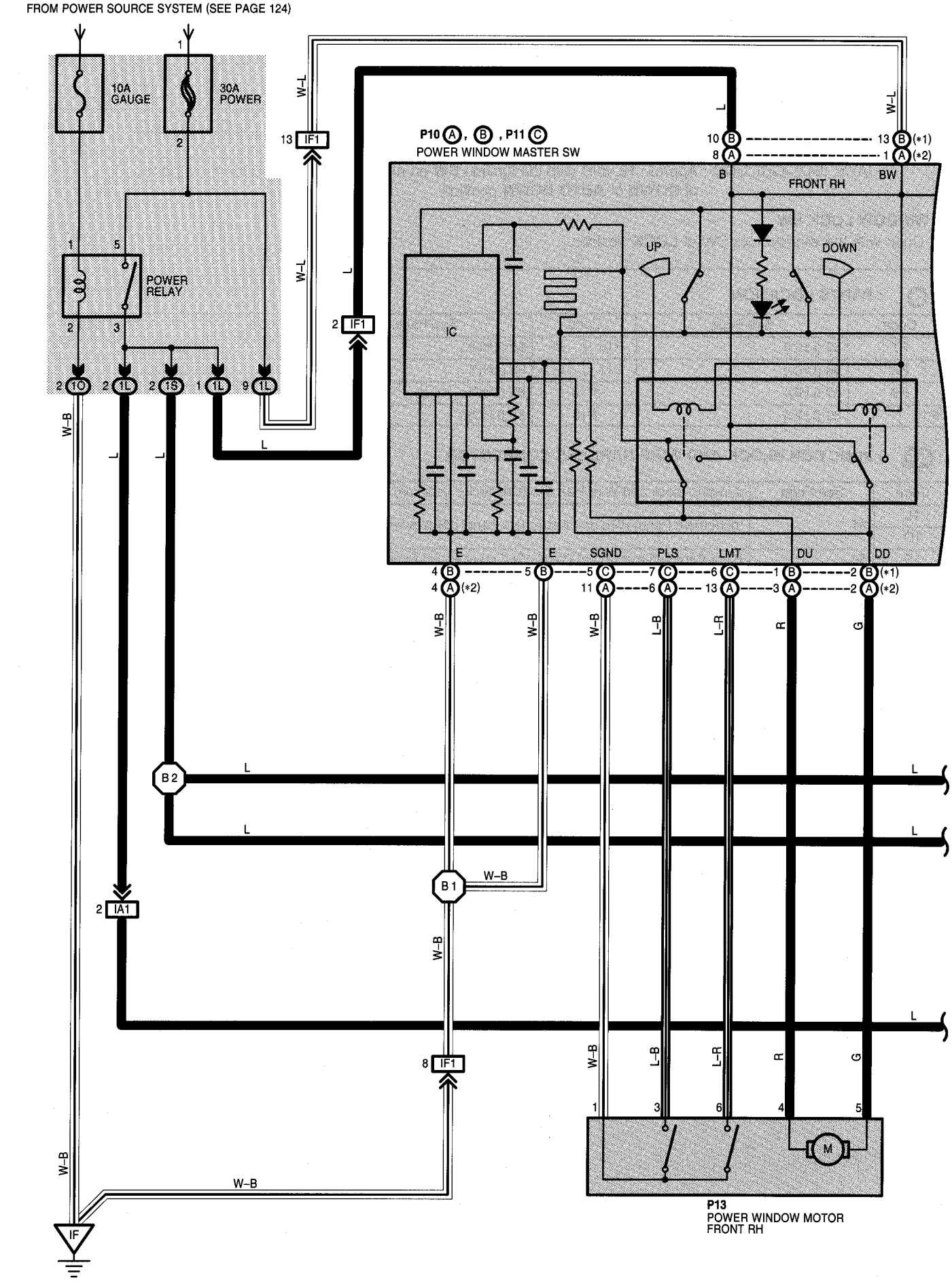

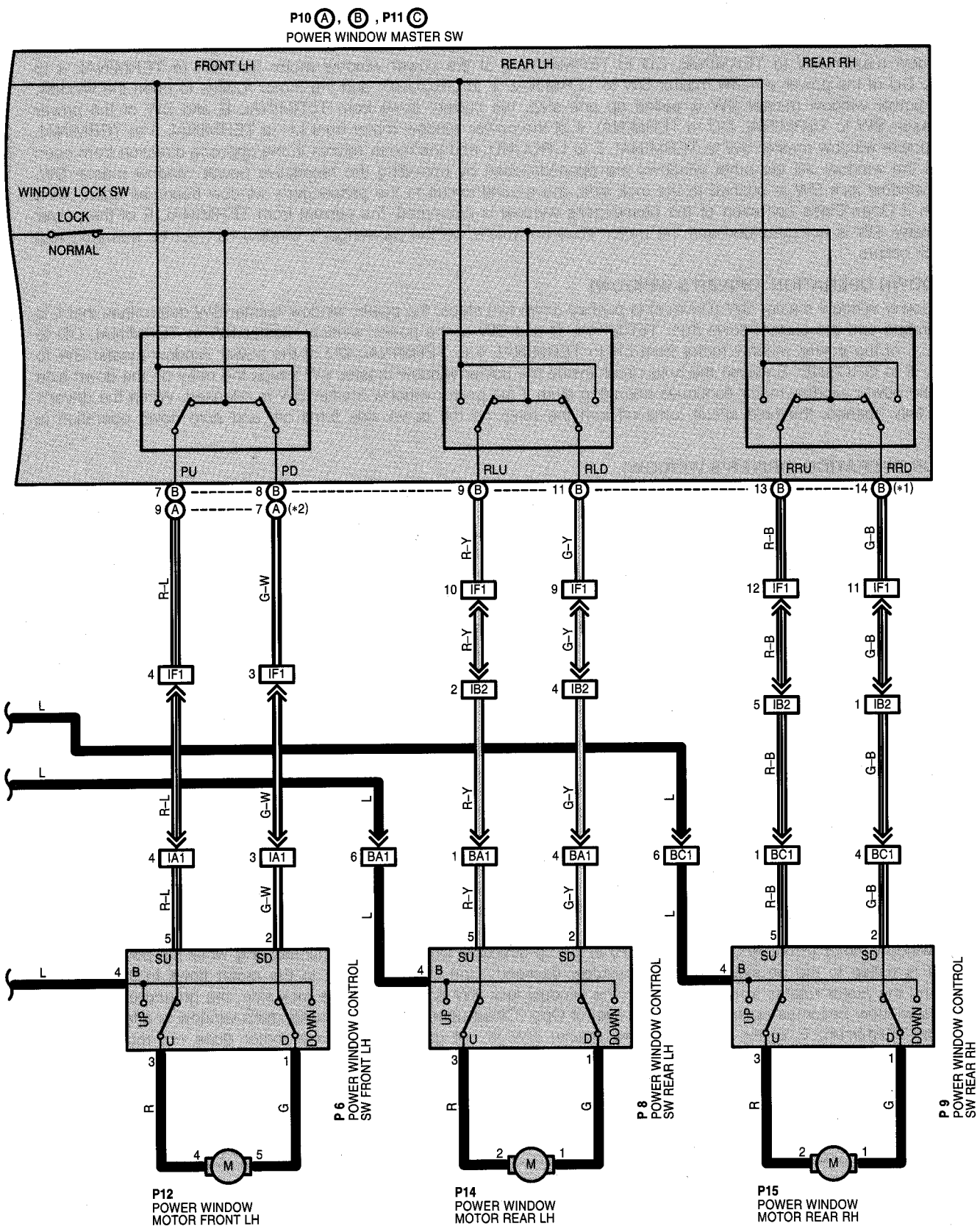
P10 A, B, P11 C
POWER WINDOW MASTER SW
FRONT LH
REAR LH
REAR RH
WINDOW LOCK SW
LOCK
NORMAL
PU
PD
RLU
RLD
RRU
RRD
(*2)
(*1)
IF1
IB2
IA1
BA1
BC1
SU
SD
UP
DOWN
P 6
POWER WINDOW CONTROL
SW FRONT LH
P 8
POWER WINDOW CONTROL
SW REAR LH
P 9
POWER WINDOW CONTROL
SW REAR RH
P12
POWER WINDOW
MOTOR FRONT LH
P14
POWER WINDOW
MOTOR REAR LH
P15
POWER WINDOW
MOTOR REAR RH

POWER WINDOW (RHD)

SYSTEM OUTLINE

When the ignition SW is turned on, the current flows from the GAUGE fuse through the POWER relay to GROUND, thus the POWER relay is turned on and the current flows through the POWER fuse to TERMINAL 5 of the POWER relay to TERMINAL 3 to TERMINAL B of the power window master SW and TERMINAL B of the power window control SW front RH, Rear LH and RH.

1. MANUAL OPERATION (POWER WINDOW MASTER SW)

When the power window master SW (Driver's) is pushed down one step, the current flows from TERMINAL B and BW of the power window master SW to TERMINAL DD to TERMINAL 5 of the power window motor front LH to TERMINAL 4 to TERMINAL DU of the power window master SW to TERMINAL E to GROUND, and the motor rotates to open the window. When the power window master SW is pulled up one step, the current flows from TERMINAL B and BW of the power window master SW to TERMINAL DU to TERMINAL 4 of the power window motor front LH to TERMINAL 5 to TERMINAL DD of the power window master SW to TERMINAL E to GROUND, and the motor rotates in the opposite direction from open and closes the window. All the other windows are opened/closed by operating the respective power window master SW. When the window lock SW is pushed to the lock side, the ground circuit to the passenger's window becomes open. As a result, even if Open/Close operation of the passenger's window is attempted, the current from TERMINAL E of the power window master SW is not grounded and the motor does not rotate, so the passenger's window can not be operated and window lock occurs.

2. AUTO DOWN OPERATION (DRIVER'S WINDOW)

When the power window master SW (Driver's) is pushed down two steps, the power window master SW determines that it is AUTO operation and the current flows from TERMINAL B and BW of the power window master SW to TERMINAL DD to TERMINAL 5 of the power window motor front LH to TERMINAL 4 to TERMINAL DU of the power window master SW to TERMINAL E to GROUND. Because the hold circuit inside the power window master SW keeps the relay on the down side activated, the power window motor continues operating even if the power window master SW is released. When the driver's window is fully opened, the hold circuit turns off and the relay on the down side turns off, and auto down operation is completed.

3. AUTO UP OPERATION (DRIVER'S WINDOW)

When the power window master SW (Driver's) is pulled up two steps, the power window master SW determines that it is AUTO operation and the current flows from TERMINAL B and BW of the power window master SW to TERMINAL DU to TERMINAL 4 of the power window motor front LH to TERMINAL 5 to TERMINAL DD of the power window master SW to TERMINAL E to GROUND. Because the hold circuit inside the power window master SW keeps the relay on the up side activated, the power window motor continues operating even if the power window master SW is released. When the driver's window is closed, the hold circuit turns off and the relay on the up side turns off, and auto up operation is completed.

4. STOPPING OF AUTO DOWN OPERATION (DRIVER'S WINDOW)

When the power window master SW (Driver's) is pulled to the up side during auto down operation, a ground circuit opens in the power window master SW and current does not flow from TERMINAL DU of the power window master SW to TERMINAL E, so the motor stops, causing auto down operation to stop. If the power window master SW is pulled continuously, the motor rotates in the up direction in manual up operation.

5. STOPPING OF AUTO UP OPERATION (DRIVER'S WINDOW)

When the power window master SW (Driver's) is pushed to the down side during auto up operation, a ground circuit opens in the power window master SW and current does not flow from TERMINAL DD of the power window master SW to TERMINAL E, so the motor stops, causing auto up operation to stop. If the power window master SW is pushed continuously, the motor rotates in the down direction in manual down operation.

6. MANUAL OPERATION (POWER WINDOW CONTROL SW FRONT RH, REAR LH AND RH)

With the power window control SW (Front RH, rear LH or RH) pulled to the up side, current flows from TERMINAL B of the power window control SW to TERMINAL U to power window motor to TERMINAL D of the power window control SW to TERMINAL SD to TERMINAL PD, RLD or RRD of the power window master SW to TERMINAL E to GROUND and rotates the power window motor (Front RH, rear LH or RH) in the up direction. Up operation continues only while the power window control SW is pulled to the up side. When the window descends, the current flowing to the motor flows in the opposite direction, and the motor rotates in reverse. When the window lock SW is pushed to the lock side, the ground circuit to the passenger's window becomes open. As a result, even if Open/Close operation of the passenger's window is attempted, the current from TERMINAL E of the power window master SW is not grounded and the motor does not rotate, so the passenger's window can not be operated and window lock occurs.

7. CAUGHT PREVENTION OPERATION (DRIVER'S WINDOW)

At the time of one-touch automatic up operation, if foreign object is caught between a window frame and a glass, the glass rise will stop and reverse to descend.

SERVICE HINTS

P10 (A), (B) POWER WINDOW MASTER SW

(A) 1, (B) 3-GROUND : Always approx. **12** volts
(A) 8, (B)10-GROUND : Approx. **12** volts with the ignition SW at **ON** position
(A) 4, (B) 4, (B) 5-GROUND : Always continuity
(A) 3, (B) 1-GROUND : Approx. **12** volts with the ignition SW on and the master SW (Driver's window) at **UP** or **AUTO UP** position
(A) 2, (B) 2-GROUND : Approx. **12** volts with the ignition SW on and the master SW (Driver's window) at **DOWN** or **AUTO DOWN** position

WINDOW LOCK SW

Open with the window lock SW at **LOCK** position

: PARTS LOCATION

Code	See Page	Code	See Page	Code	See Page
P6	95 (RHD)	P10 B	95 (RHD)	P14	95 (RHD)
P8	95 (RHD)	P11 C	95 (RHD)	P15	95 (RHD)
P9	95 (RHD)	P12	95 (RHD)		
P10 A	95 (RHD)	P13	95 (RHD)		

: JUNCTION BLOCK AND WIRE HARNESS CONNECTOR

Code	See Page	Junction Block and Wire Harness (Connector Location)
1L	81	Instrument Panel Wire and Instrument Panel J/B (Lower Finish Panel)
1O		
1S	80	Floor Wire and Instrument Panel J/B (Lower Finish Panel)

: CONNECTOR JOINING WIRE HARNESS AND WIRE HARNESS

Code	See Page	Joining Wire Harness and Wire Harness (Connector Location)
IA1	106 (RHD)	Front Door LH Wire and Instrument Panel Wire (Left Kick Panel)
IB2	106 (RHD)	Floor Wire and Instrument Panel Wire (Right Side of Instrument Panel)
IF1	108 (RHD)	Front Door RH Wire and Instrument Panel Wire (Right Kick Panel)
BA1	110 (RHD)	Rear Door LH Wire and Floor Wire (Under the Left Center Pillar)
BC1	110 (RHD)	Rear Door RH Wire and Floor Wire (Under the Right Center Pillar)

: GROUND POINTS

Code	See Page	Ground Points Location
IF	106 (RHD)	Right Kick Panel

: SPLICE POINTS

Code	See Page	Wire Harness with Splice Points	Code	See Page	Wire Harness with Splice Points
B1	110 (RHD)	Front Door RH Wire	B2	110 (RHD)	Floor Wire

MOON ROOF

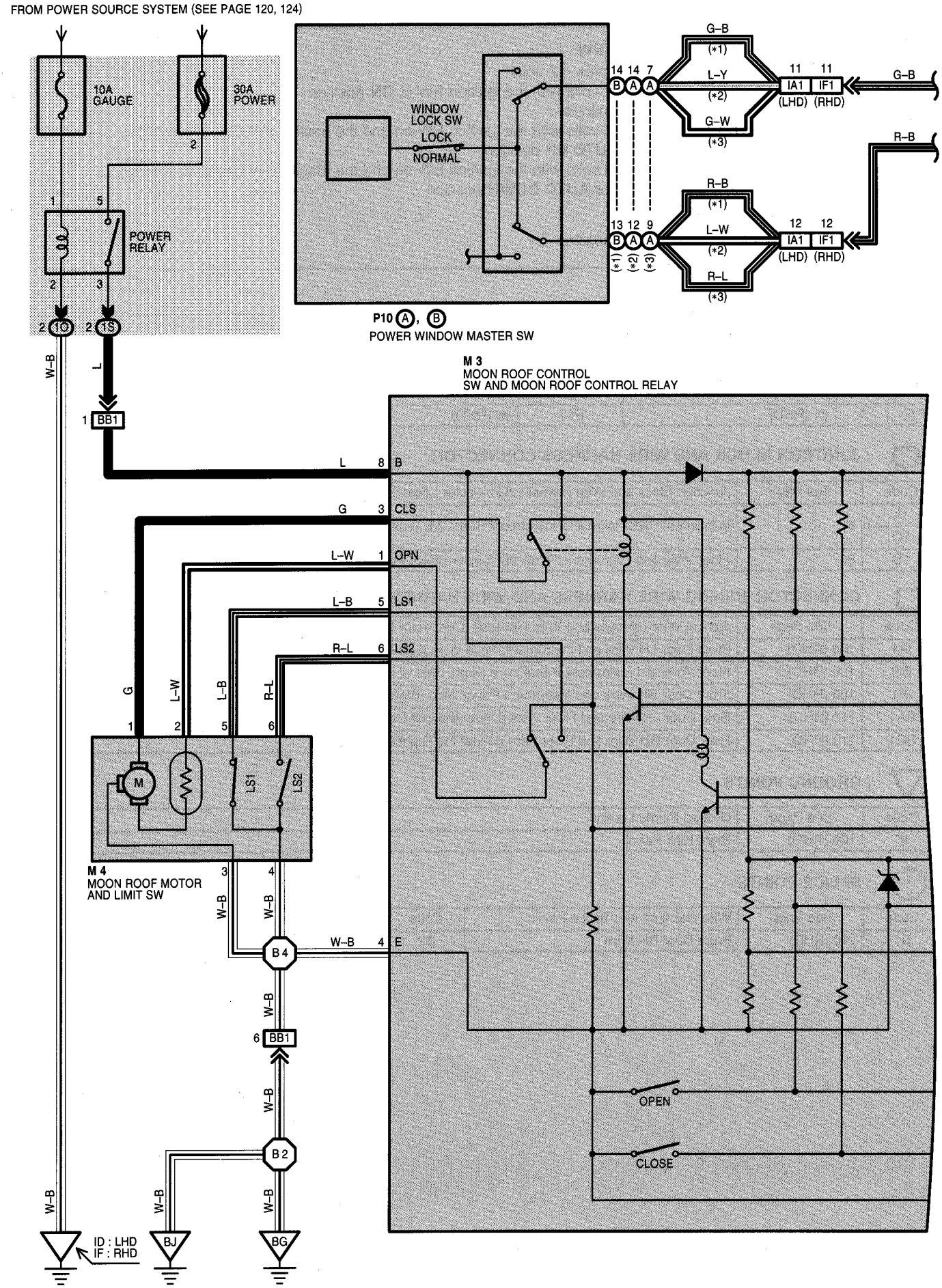
FROM POWER SOURCE SYSTEM (SEE PAGE 120, 124)
10A GAUGE
30A POWER
POWER RELAY
WINDOW LOCK SW
LOCK
NORMAL
P10 Ⓐ, Ⓑ
POWER WINDOW MASTER SW
G-B
L-Y
G-W
R-B
L-W
R-L
IA1
IF1
(LHD)
(RHD)
M 3
MOON ROOF CONTROL SW AND MOON ROOF CONTROL RELAY
BB1
B
CLS
OPN
LS1
LS2
M 4
MOON ROOF MOTOR AND LIMIT SW
B 4
B 2
OPEN
CLOSE
ID : LHD
IF : RHD
BJ
BG

* 1 : W/ REAR POWER WINDOW
* 2 : LHD W/O REAR POWER WINDOW
* 3 : RHD W/O REAR POWER WINDOW

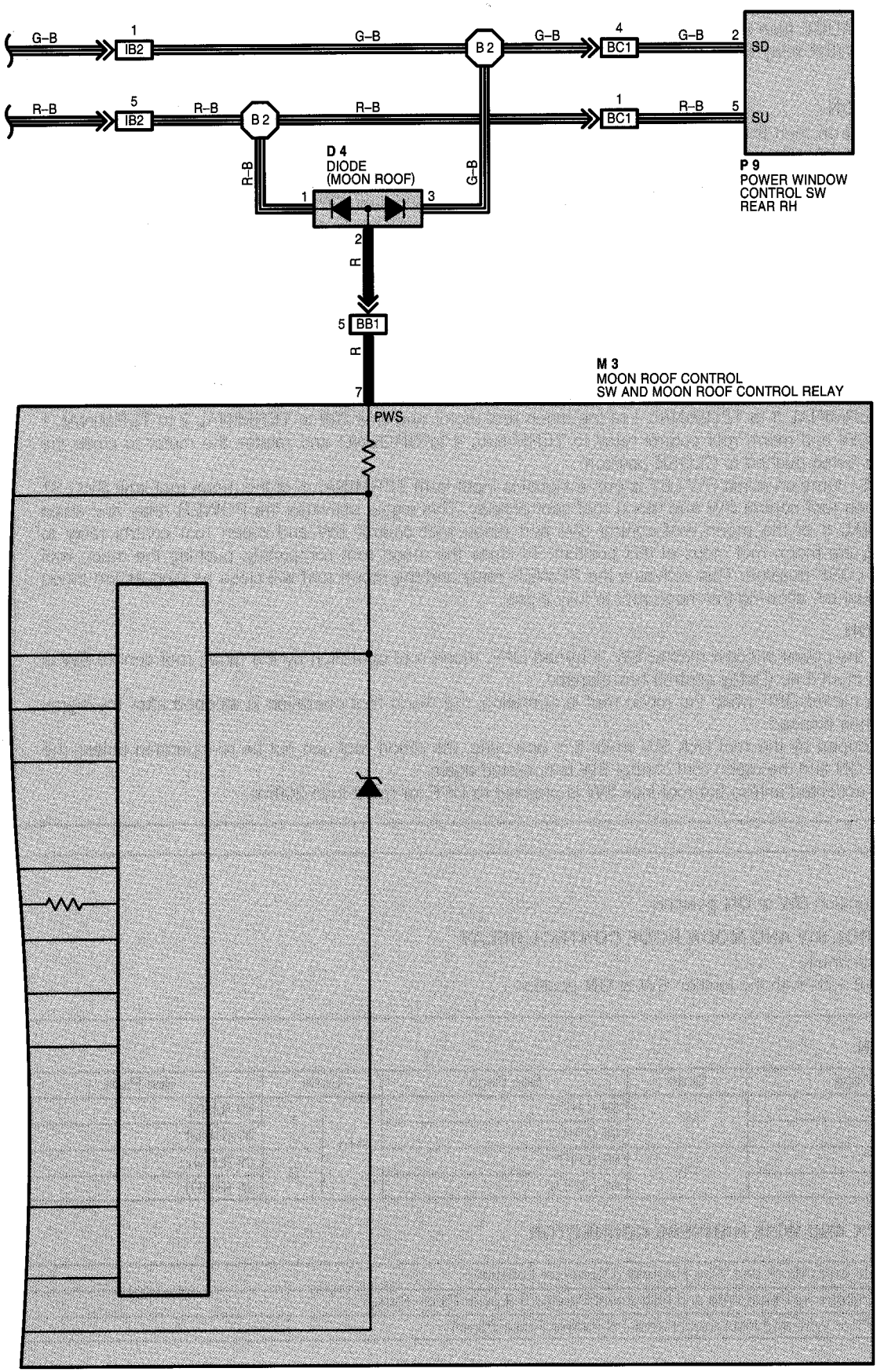

MOON ROOF

SYSTEM OUTLINE

The current always flows to TERMINAL 5 of the POWER relay through the POWER fuse, with the ignition SW turned on, the current flows through the GAUGE fuse to TERMINAL 1 of the POWER relay. This activates the relay and the current flowing to TERMINAL 5 of the POWER relay flows to TERMINAL 3 to TERMINAL 8 of the moon roof control SW and moon roof control relay.

1. SLIDE OPEN OPERATION

With the ignition SW Turned on, and the moon roof closed completely, when the moon roof control SW is pushed to OPEN position. The moon roof limit SW LS1 is on and the moon roof limit SW LS2 is off at this time.
When this occurs, the POWER relay is activated and the current to TERMINAL 8 of the moon roof control SW and moon roof control relay flows from TERMINAL 1 to TERMINAL 2 of the moon roof motor and limit SW to TERMINAL 1 to TERMINAL 3 of the moon roof control SW and moon roof control relay to TERMINAL 4 to GROUND and rotates the motor to open the moon roof while the SW is being pushed to OPEN position until they become any of the following condition such as the TERMINAL 8 becomes "OFF" or any of the SW is turned on or the time limit (About 20 seconds) is up or the current goes up the upper limit (About 25 ampere).

2. SLIDE CLOSE OPERATION

With the ignition SW turned on, and the moon roof opened completely, and the moon roof limit SW LS1 is off and moon roof limit SW LS2 on, when the moon roof control SW is pushed to CLOSE position.
When this occurs, the POWER relay is activated and the current to TERMINAL 8 of the moon roof control SW and moon roof control relay flows from TERMINAL 3 to TERMINAL 1 of the moon roof motor and limit SW to TERMINAL 2 to TERMINAL 1 of the moon roof control SW and moon roof control relay to TERMINAL 4 to GROUND and rotates the motor to close the moon roof while the SW is being pushed to CLOSE position.
The moon roof limit SW LS1 turns on (Limit SW LS2 is on), a signal is input from TERMINAL 5 of the moon roof limit SW LS1 to TERMINAL 5 of the moon roof control SW and moon roof control relay. This signal activates the POWER relay and stops continuous from TERMINAL 8 of the moon roof control SW and moon roof control SW and moon roof control relay to TERMINAL 4. As a result, the moon roof stops at this position. To close the moon roof completely, pushing the moon roof control SW again to the CLOSE position. This activates the POWER relay and the moon roof will close as long as the moon roof control SW is being pushed, allowing the moon roof to fully close.

3. ROOF LOCK FUNCTION

When the roof lock SW in the power window master SW is turned OFF, moon roof operation by the moon roof control SW is prohibited, after the signal input time (Delay control) has elapsed.
When the roof lock SW is turned OFF while the moon roof is operating, the moon roof operation is stopped after the signal input time (Delay control) has elapsed.
When the moon roof is stopped by the roof lock SW while it is operating, the moon roof can not be re-operated unless the window lock SW is turned ON and the moon roof control SW is operated again.
The roof lock signal is not accepted unless the roof lock SW is pressed to OFF for more than 200ms.

SERVICE HINTS

POWER RELAY

5-3 : Closed with the ignition SW at **ON** position

M3 MOON ROOF CONTROL SW AND MOON ROOF CONTROL RELAY

4-GROUND : Always continuity
8-GROUND : Approx. **12** volts with the ignition SW at **ON** position

○ : PARTS LOCATION

Code	See Page	Code	See Page	Code		See Page
D4	86 (LHD)	M4	89 (LHD)	P10	A	89 (LHD)
	92 (RHD)		95 (RHD)			95 (RHD)
M3	89 (LHD)	P9	89 (LHD)		B	89 (LHD)
	95 (RHD)		95 (RHD)			95 (RHD)

: JUNCTION BLOCK AND WIRE HARNESS CONNECTOR

Code	See Page	Junction Block and Wire Harness (Connector Location)
1O	81	Instrument Panel Wire and Instrument Panel J/B (Lower Finish Panel)
1S	80	Floor Wire and Instrument Panel J/B (Lower Finish Panel)

: CONNECTOR JOINING WIRE HARNESS AND WIRE HARNESS

Code	See Page	Joining Wire Harness and Wire Harness (Connector Location)
IA1	98 (LHD)	Front Door LH Wire and Instrument Panel Wire (Left Kick Panel)
	106 (RHD)	
IB2	98 (LHD)	Floor Wire and Instrument Panel Wire (Left Side of Instrument Panel)
	106 (RHD)	Floor Wire and Instrument Panel Wire (Right Side of Instrument Panel)
IF1	100 (LHD)	Front Door RH Wire and Instrument Panel Wire (Right Kick Panel)
	108 (RHD)	
BB1	102 (LHD)	Roof Wire and Floor Wire (Left Rear Side Quarter Panel)
	110 (RHD)	Roof Wire and Floor Wire (Right Rear Side Quarter Panel)
BC1	102 (LHD)	Rear Door RH Wire and Floor Wire (Under the Right Center Pillar)
	110 (RHD)	

: GROUND POINTS

Code	See Page	Ground Points Location
ID	98 (LHD)	Left Kick Panel
IF	106 (LHD)	Right Kick Panel
BG	102 (LHD)	Left Rear Side Quarter Panel
	110 (RHD)	
BJ	102 (LHD)	Right Rear Side Quarter Panel
	110 (RHD)	

: SPLICE POINTS

Code	See Page	Wire Harness with Splice Points	Code	See Page	Wire Harness with Splice Points
B2	102 (LHD)	Floor Wire	B4	102 (LHD)	Roof Wire
	110 (RHD)			110 (RHD)	

REMOTE CONTROL MIRROR

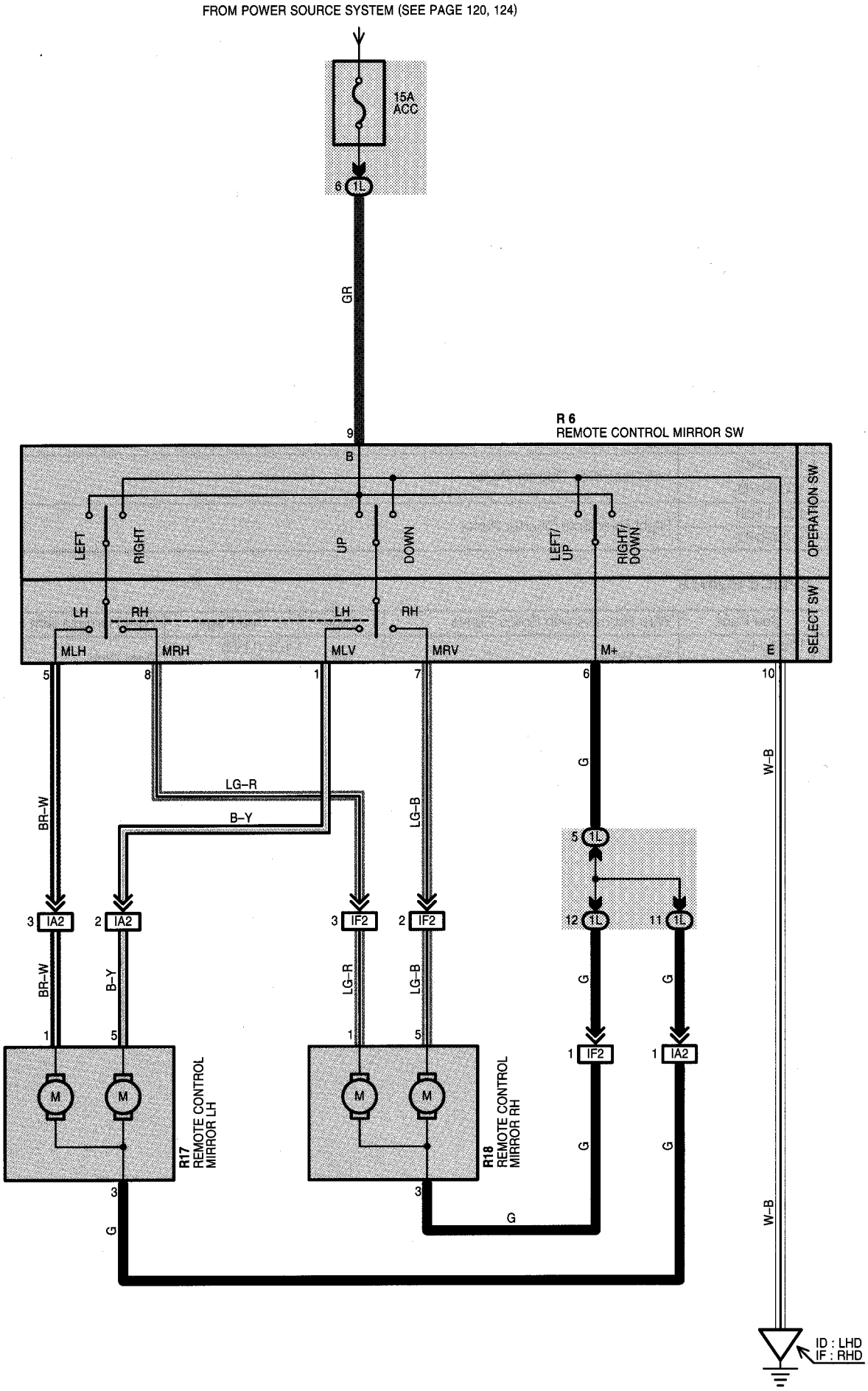

SERVICE HINTS

R6 REMOTE CONTROL MIRROR SW

9-GROUND : Approx. **12** volts with the ignition SW at **ACC** or **ON** position
6-10 : Continuity with the operation SW at **UP** or **LEFT** position
5-10 : Continuity with the operation SW at **RIGHT** position and the select SW at **LH** position
1-10 : Continuity with the operation SW at **DOWN** position and the select SW at **LH** position
8-10 : Continuity with the operation SW at **RIGHT** position and the select SW at **RH** position
7-10 : Continuity with the operation SW at **DOWN** position and the select SW at **RH** position

○ : PARTS LOCATION

Code	See Page	Code	See Page	Code	See Page
R6	87 (LHD)	R17	89 (LHD)	R18	89 (LHD)
	93 (RHD)		95 (RHD)		95 (RHD)

: JUNCTION BLOCK AND WIRE HARNESS CONNECTOR

Code	See Page	Junction Block and Wire Harness (Connector Location)
1L	81	Instrument Panel Wire and Instrument Panel J/B (Lower Finish Panel)

: CONNECTOR JOINING WIRE HARNESS AND WIRE HARNESS

Code	See Page	Joining Wire Harness and Wire Harness (Connector Location)
IA2	98 (LHD)	Front Door LH Wire and Instrument Panel Wire (Left Kick Panel)
	106 (RHD)	
IF2	100 (LHD)	Front Door RH Wire and Instrument Panel Wire (Right Kick Panel)
	108 (RHD)	

▽ : GROUND POINTS

Code	See Page	Ground Points Location
ID	98 (LHD)	Left Kick Panel
IF	106 (RHD)	Right Kick Panel

SHIFT LOCK

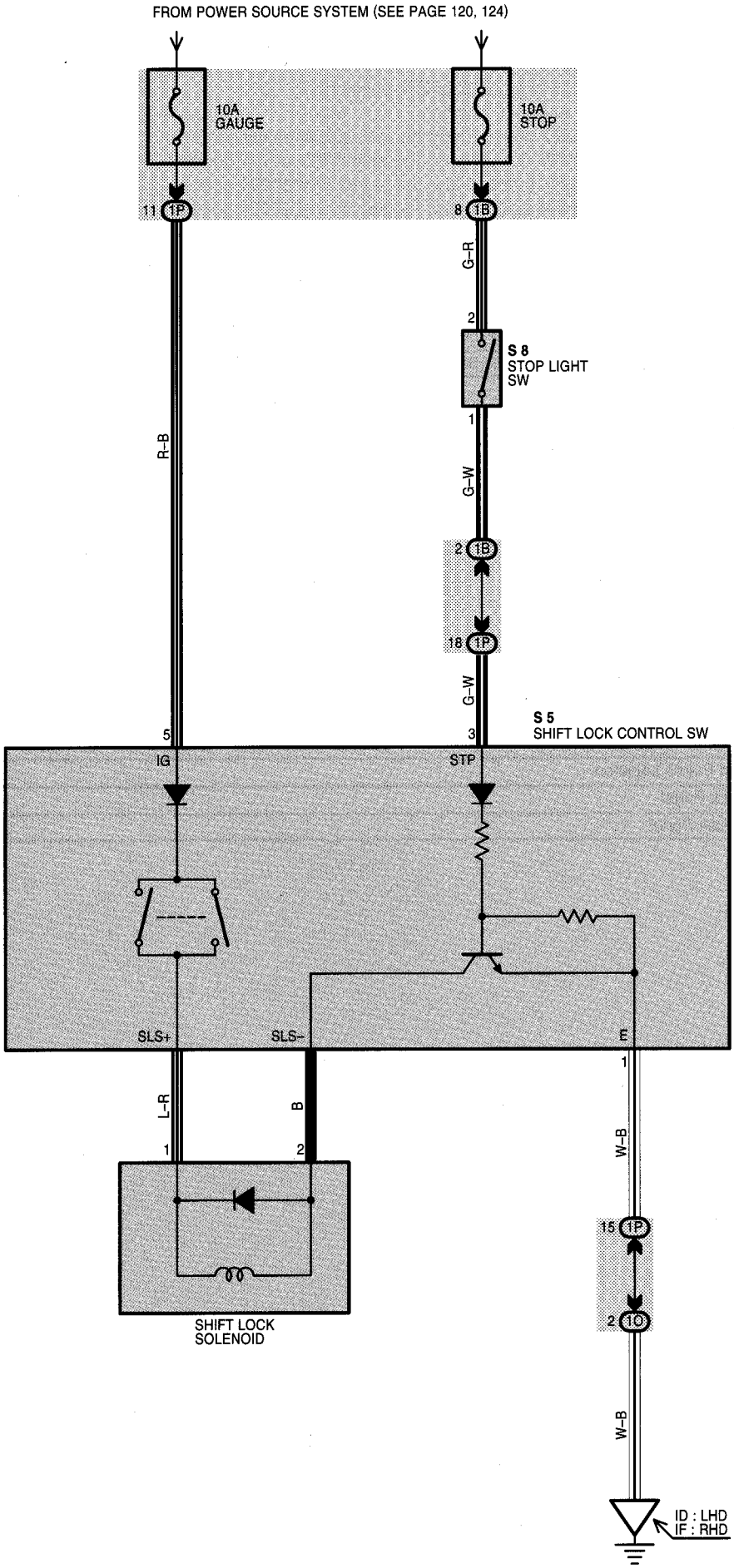
FROM POWER SOURCE SYSTEM (SEE PAGE 120, 124)
10A
GAUGE
10A
STOP
11
1P
8
1B
G-R
2
S 8
STOP LIGHT
SW
1
R-B
G-W
2
1B
18
1P
G-W
S 5
SHIFT LOCK CONTROL SW
5
3
IG
STP
SLS+
SLS-
E
1
L-R
B
1
2
W-B
15
1P
2
1O
SHIFT LOCK
SOLENOID
W-B
ID : LHD
IF : RHD

SERVICE HINTS

S5 SHIFT LOCK CONTROL SW

5-GROUND : Approx. **12** volts with the ignition SW at **ON** position
3-GROUND : Approx. **12** volts with the brake pedal depressed
1-GROUND : Always continuity

S8 STOP LIGHT SW

2-1 : Closed with the brake pedal depressed

○ : PARTS LOCATION

Code	See Page	Code	See Page	Code	See Page
S5	87 (LHD)	S8	87 (LHD)		
	93 (RHD)		93 (RHD)		

: JUNCTION BLOCK AND WIRE HARNESS CONNECTOR

Code	See Page	Junction Block and Wire Harness (Connector Location)
1B	80	Engine Room Main Wire and Instrument Panel J/B (Lower Finish Panel)
1O	81	Instrument Panel Wire and Instrument Panel J/B (Lower Finish Panel)
1P		

▽ : GROUND POINTS

Code	See Page	Ground Points Location
ID	98 (LHD)	Left Kick Panel
IF	106 (RHD)	Right Kick Panel

MULTI DISPLAY

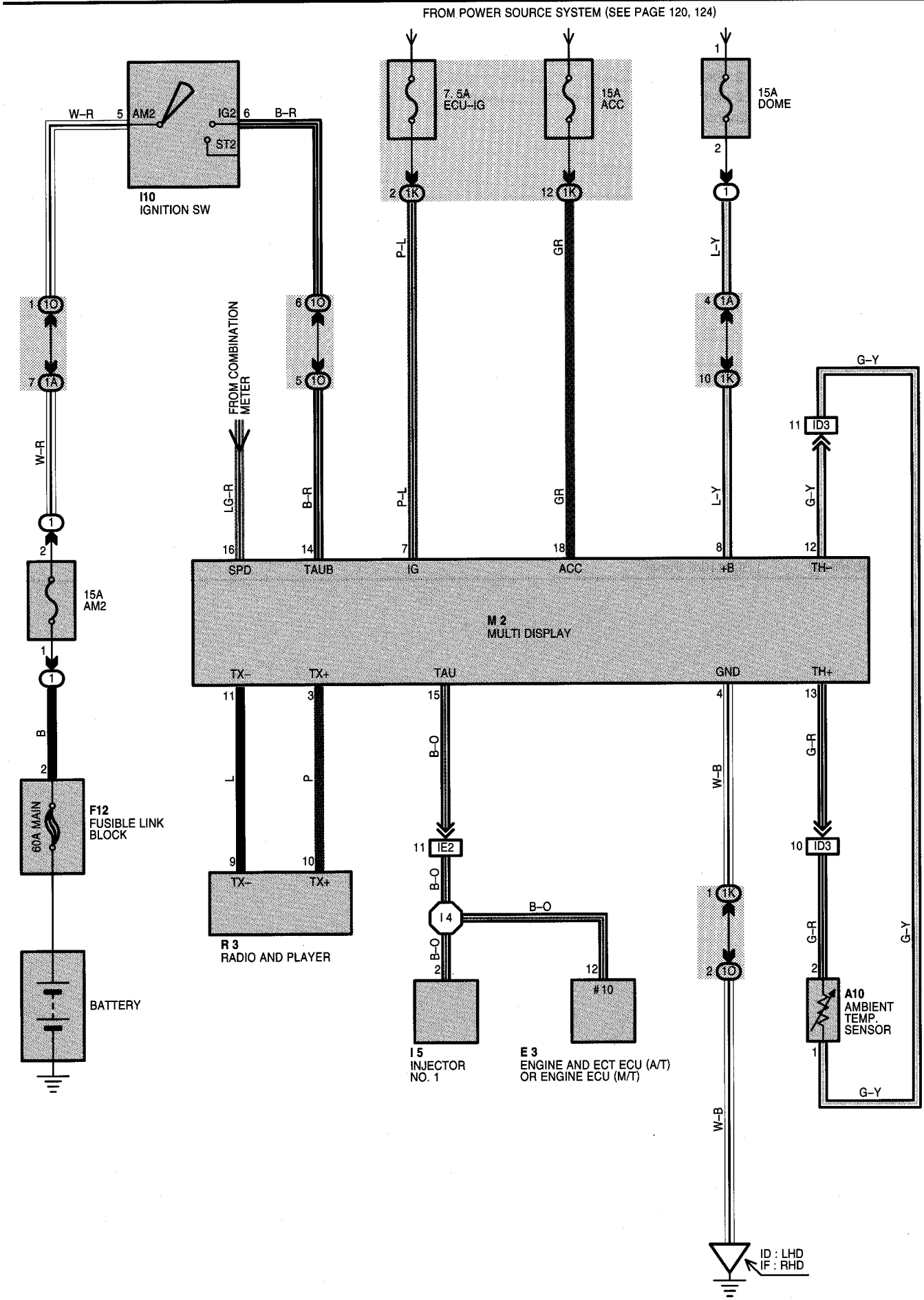

SERVICE HINTS

M2 MULTI DISPLAY

7, 14-GROUND: Approx. **12** volts with the ignition SW at **ON** position
18-GROUND : Approx. **12** volts with the ignition SW at **ACC** or **ON** position
8-GROUND : Always approx. **12** volts
4-GROUND : Always continuity

: PARTS LOCATION

Code	See Page	Code	See Page	Code	See Page
A10	84 (LHD)	F12	90 (RHD)	M2	87 (LHD)
	90 (RHD)	I5	85 (LHD)		93 (RHD)
E3	86 (LHD)		91 (RHD)	R3	87 (LHD)
	92 (RHD)	I10	87 (LHD)		93 (RHD)
F12	84 (LHD)		93 (RHD)		

: RELAY BLOCKS

Code	See Page	Relay Blocks (Relay Block Location)
1	78	Engine Room R/B No.1 (Engine Compartment Left)

: JUNCTION BLOCK AND WIRE HARNESS CONNECTOR

Code	See Page	Junction Block and Wire Harness (Connector Location)
1A	80	Engine Room Main Wire and Instrument Panel J/B (Lower Finish Panel)
1K	81	Instrument Panel Wire and Instrument Panel J/B (Lower Finish Panel)
1O		

: CONNECTOR JOINING WIRE HARNESS AND WIRE HARNESS

Code	See Page	Joining Wire Harness and Wire Harness (Connector Location)
ID3	100 (LHD)	Engine Room Main Wire and Instrument Panel Wire (Left Side of Instrument Panel)
	108 (RHD)	Engine Room Main Wire and Instrument Panel Wire (Right Side of Instrument Panel)
IE2	100 (LHD)	Engine Wire and Instrument Panel Wire (Behind the Glove Box)
	108 (RHD)	

: GROUND POINTS

Code	See Page	Ground Points Location
ID	98 (LHD)	Left Kick Panel
IF	106 (RHD)	Right Kick Panel

: SPLICE POINTS

Code	See Page	Wire Harness with Splice Points	Code	See Page	Wire Harness with Splice Points
I4	100 (LHD)	Engine Wire	I4	108 (RHD)	Engine Wire

RADIO AND PLAYER

* 1 : 4 SPEAKER

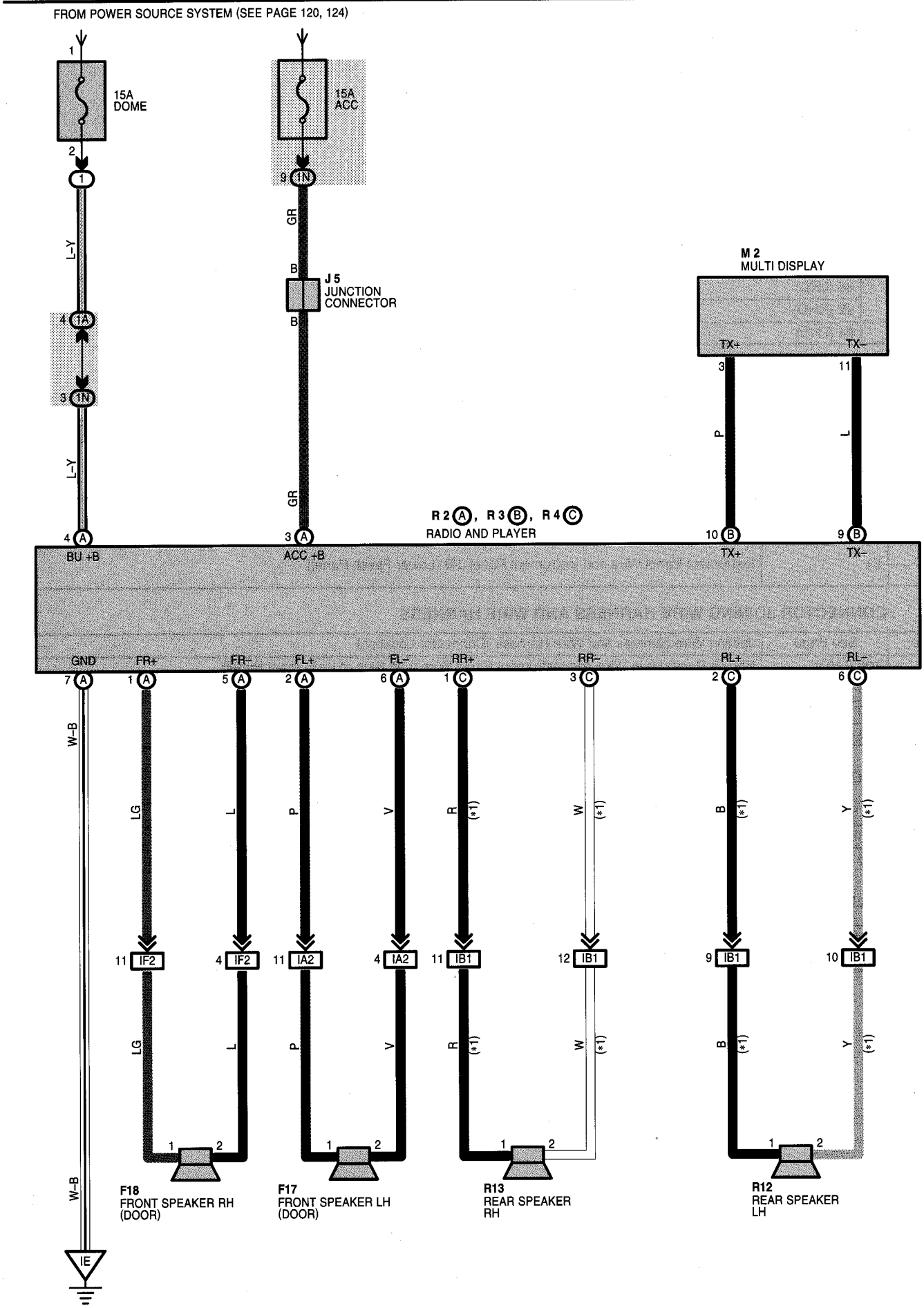

SERVICE HINTS

R2 (A) RADIO AND PLAYER

(A) 4-GROUND : Always approx. **12** volts
(A) 3-GROUND : Approx. **12** volts with the ignition SW at **ACC** or **ON** position
(A) 7-GROUND : Always continuity

: PARTS LOCATION

Code	See Page	Code	See Page	Code	See Page
F17	88 (LHD)	M2	87 (LHD)	R4 C	87 (LHD)
	94 (RHD)		93 (RHD)		93 (RHD)
F18	88 (LHD)	R2 A	87 (LHD)	R12	89 (LHD)
	94 (RHD)		93 (RHD)		95 (RHD)
J5	87 (LHD)	R3 B	87 (LHD)	R13	89 (LHD)
	93 (RHD)		93 (RHD)		95 (RHD)

: RELAY BLOCKS

Code	See Page	Relay Blocks (Relay Block Location)
1	78	Engine Room R/B No.1 (Engine Compartment Left)

: JUNCTION BLOCK AND WIRE HARNESS CONNECTOR

Code	See Page	Junction Block and Wire Harness (Connector Location)
1A	80	Engine Room Main Wire and Instrument Panel J/B (Lower Finish Panel)
1N	81	Instrument Panel Wire and Instrument Panel J/B (Lower Finish Panel)

: CONNECTOR JOINING WIRE HARNESS AND WIRE HARNESS

Code	See Page	Joining Wire Harness and Wire Harness (Connector Location)
IA2	98 (LHD)	Front Door LH Wire and Instrument Panel Wire (Left Kick Panel)
	106 (RHD)	
IB1	98 (LHD)	Floor Wire and Instrument Panel Wire (Left Side of Instrument Panel)
	106 (RHD)	Floor Wire and Instrument Panel Wire (Right Side of Instrument Panel)
IF2	100 (LHD)	Front Door RH Wire and Instrument Panel Wire (Right Kick Panel)
	108 (RHD)	

: GROUND POINTS

Code	See Page	Ground Points Location
IE	98 (LHD)	Instrument Panel Brace LH
	106 (RHD)	Instrument Panel Brace RH

CLOCK (w/o MULTI DISPLAY)

* 1 : W/ DAYTIME RUNNING LIGHT
* 2 : W/O DAYTIME RUNNING LIGHT

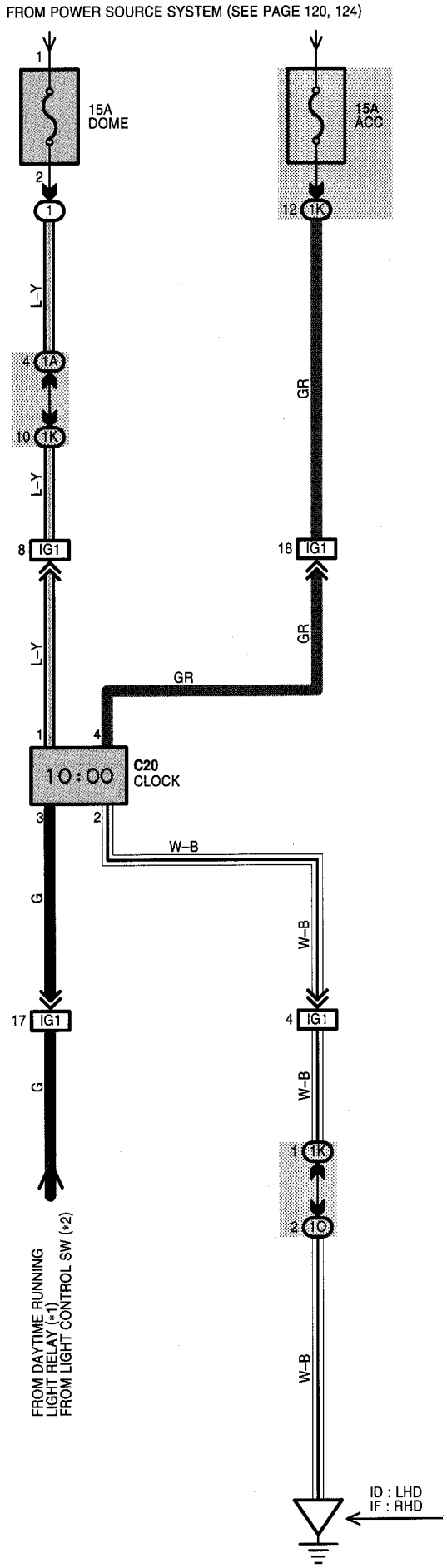

SERVICE HINTS

C20 CLOCK

4-GROUND : Approx. **12** volts with the ignition SW at **ACC** or **ON** position
1-GROUND : Always approx. **12** volts
3-GROUND : Approx. **12** volts with the light control SW at **TAIL** or **HEAD** position
2-GROUND : Always continuity

: PARTS LOCATION

Code	See Page	Code	See Page	Code	See Page
C20	86 (LHD)	C20	92 (RHD)		

: RELAY BLOCKS

Code	See Page	Relay Blocks (Relay Block Location)
1	78	Engine Room R/B No.1 (Engine Compartment Left)

: JUNCTION BLOCK AND WIRE HARNESS CONNECTOR

Code	See Page	Junction Block and Wire Harness (Connector Location)
1A	80	Engine Room Main Wire and Instrument Panel J/B (Lower Finish Panel)
1K	81	Instrument Panel Wire and Instrument Panel J/B (Lower Finish Panel)
1O		

: CONNECTOR JOINING WIRE HARNESS AND WIRE HARNESS

Code	See Page	Joining Wire Harness and Wire Harness (Connector Location)
IG1	100 (LHD)	Instrument Panel Wire and Clock Wire (Behind the Instrument Panel Center)
	108 (RHD)	

: GROUND POINTS

Code	See Page	Ground Points Location
ID	98 (LHD)	Left Kick Panel
IF	106 (RHD)	Right Kick Panel

POWER OUTLET

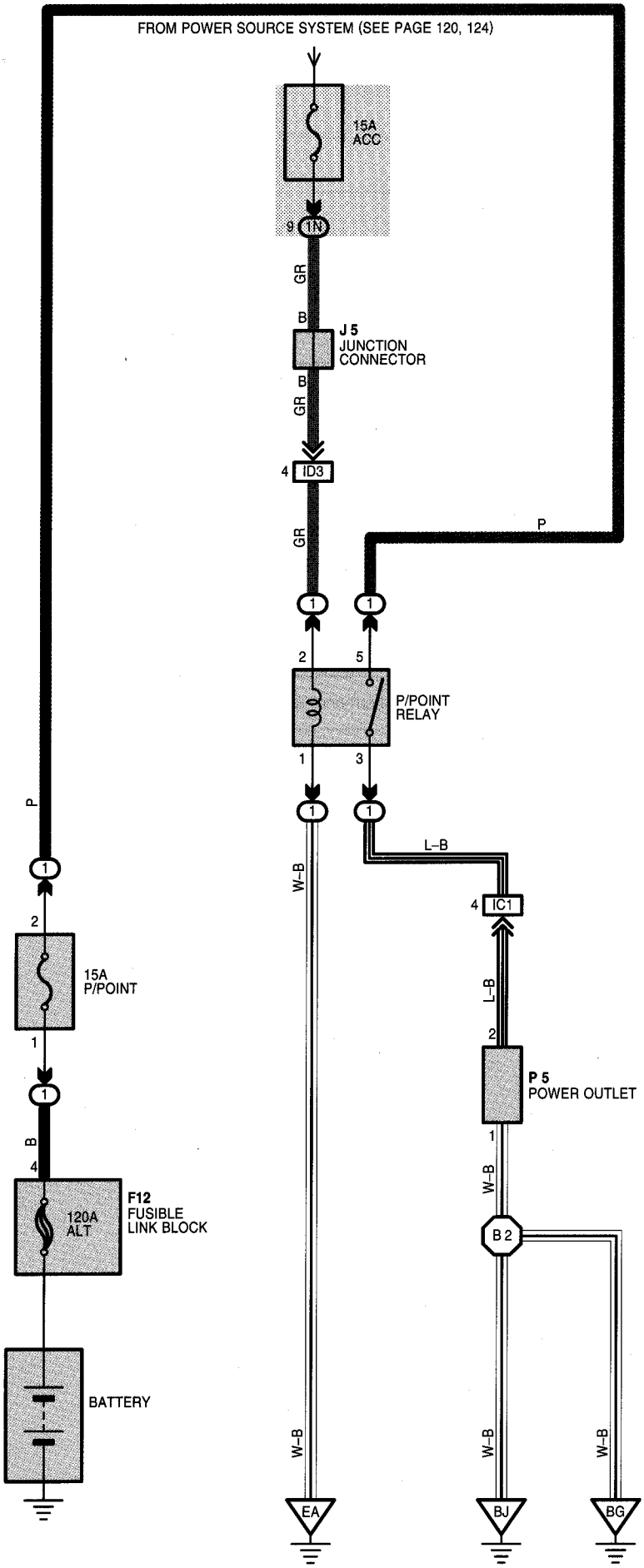

SERVICE HINTS

P5 POWER OUTLET

2-GROUND : Approx. **12** volts with the ignition SW at **ACC** or **ON** position
1-GROUND : Always continuity

P/POINT RELAY

5-3 : Closed with the ignition SW at **ACC** or **ON** position

: PARTS LOCATION

Code	See Page	Code	See Page	Code	See Page
F12	84 (LHD)	J5	87 (LHD)	P5	89 (LHD)
	90 (RHD)		93 (RHD)		95 (RHD)

: RELAY BLOCKS

Code	See Page	Relay Blocks (Relay Block Location)
1	78	Engine Room R/B No.1 (Engine Compartment Left)

: JUNCTION BLOCK AND WIRE HARNESS CONNECTOR

Code	See Page	Junction Block and Wire Harness (Connector Location)
1N	81	Instrument Panel Wire and Instrument Panel J/B (Lower Finish Panel)

: CONNECTOR JOINING WIRE HARNESS AND WIRE HARNESS

Code	See Page	Joining Wire Harness and Wire Harness (Connector Location)
IC1	98 (LHD)	Engine Room Main Wire and Floor Wire (Left Side of Instrument Panel)
	106 (RHD)	Engine Room Main Wire and Floor Wire (Right Side of Instrument Panel)
ID3	100 (LHD)	Engine Room Main Wire and Instrument Panel Wire (Left Side of Instrument Panel)
	108 (RHD)	Engine Room Main Wire and Instrument Panel Wire (Right Side of Instrument Panel)

: GROUND POINTS

Code	See Page	Ground Points Location
EA	96 (LHD)	Front Right Fender Apron
	104 (RHD)	
BG	102 (LHD)	Left Rear Side Quarter Panel
	110 (RHD)	
BJ	102 (LHD)	Right Rear Side Quarter Panel
	110 (RHD)	

: SPLICE POINTS

Code	See Page	Wire Harness with Splice Points	Code	See Page	Wire Harness with Splice Points
B2	102 (LHD)	Floor Wire	B2	110 (RHD)	Floor Wire

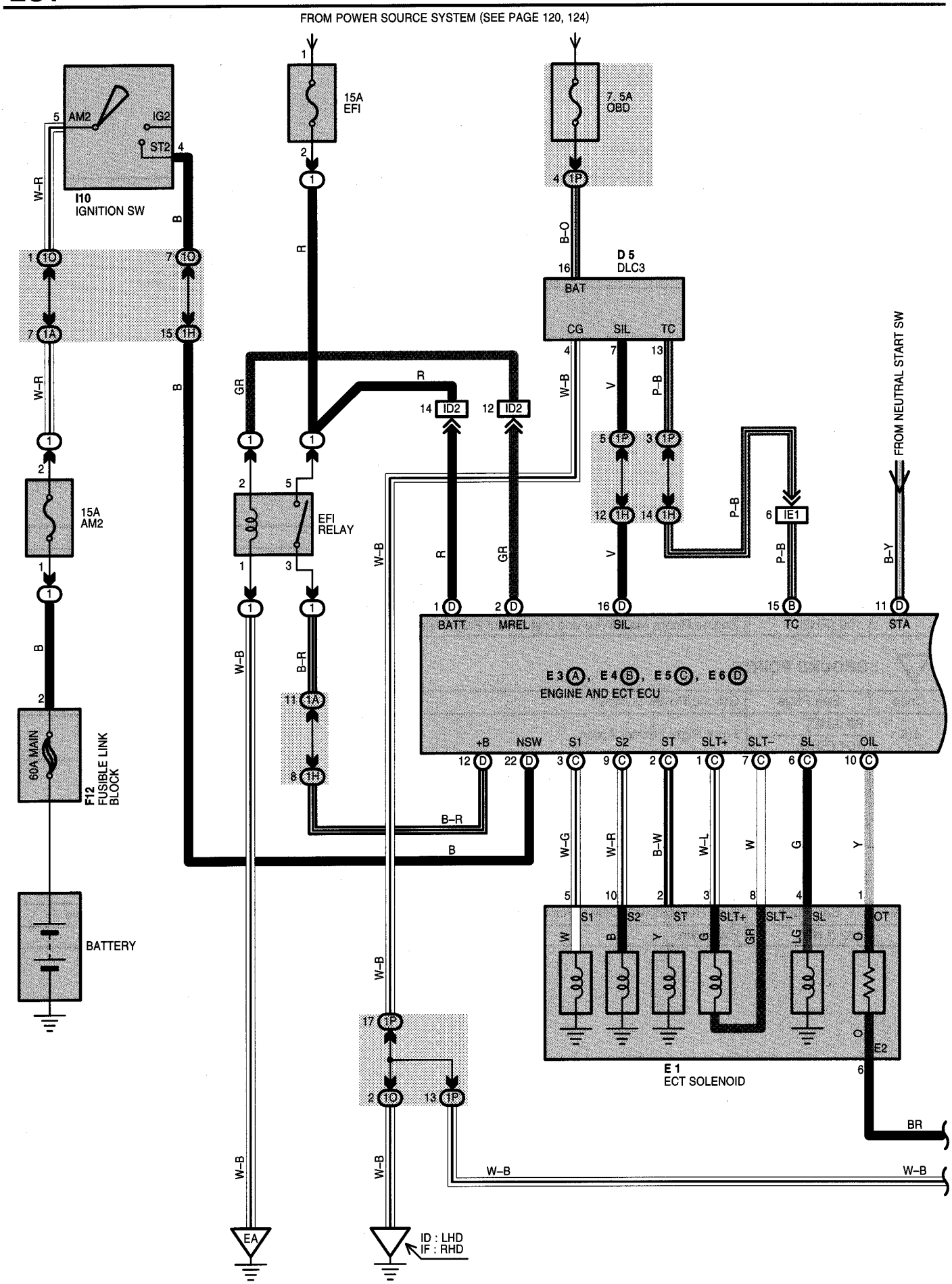
FROM POWER SOURCE SYSTEM (SEE PAGE 120, 124)
I10
IGNITION SW
AM2
IG2
ST2
15A
EFI
7.5A
OBD
D5
DLC3
BAT
CG
SIL
TC
FROM NEUTRAL START SW
15A
AM2
EFI
RELAY
ID2
IE1
BATT
MREL
SIL
TC
STA
E3 A, E4 B, E5 C, E6 D
ENGINE AND ECT ECU
+B
NSW
S1
S2
ST
SLT+
SLT-
SL
OIL
60A MAIN
F12
FUSIBLE LINK
BLOCK
BATTERY
E1
ECT SOLENOID
OT
E2
BR
EA
ID : LHD
IF : RHD

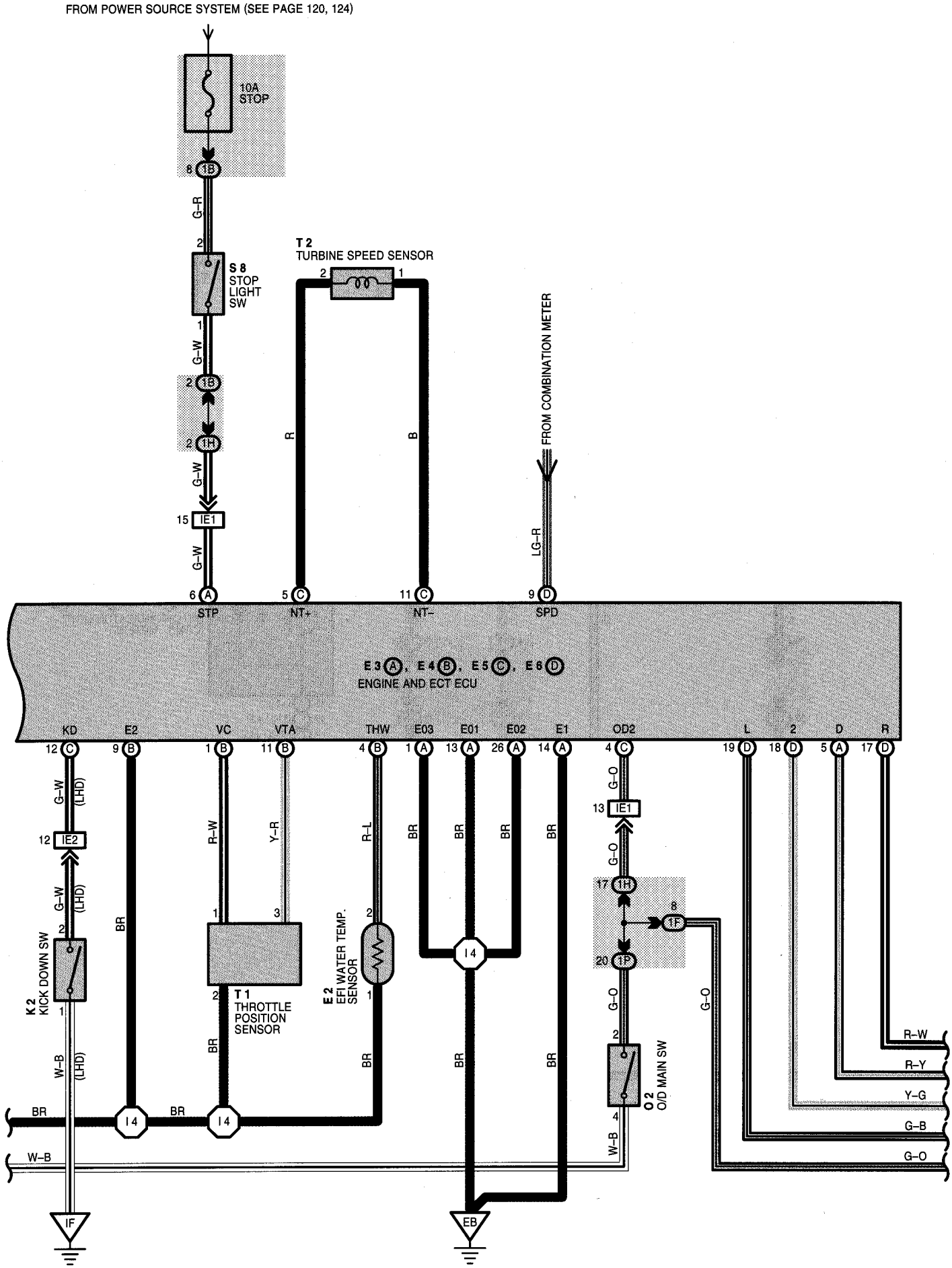
FROM POWER SOURCE SYSTEM (SEE PAGE 120, 124)
10A STOP
S 8 STOP LIGHT SW
T 2 TURBINE SPEED SENSOR
FROM COMBINATION METER
STP
NT+
NT–
SPD
E3, E4, E5, E6
ENGINE AND ECT ECU
KD
E2
VC
VTA
THW
E03
E01
E02
E1
OD2
L
2
D
R
K 2 KICK DOWN SW
T 1 THROTTLE POSITION SENSOR
E 2 EFI WATER TEMP. SENSOR
O 2 O/D MAIN SW
IF
EB

* 1 : ANALOG METER TYPE
* 2 : DIGITAL METER TYPE
* 3 : W/ ABS
* 4 : W/O ABS

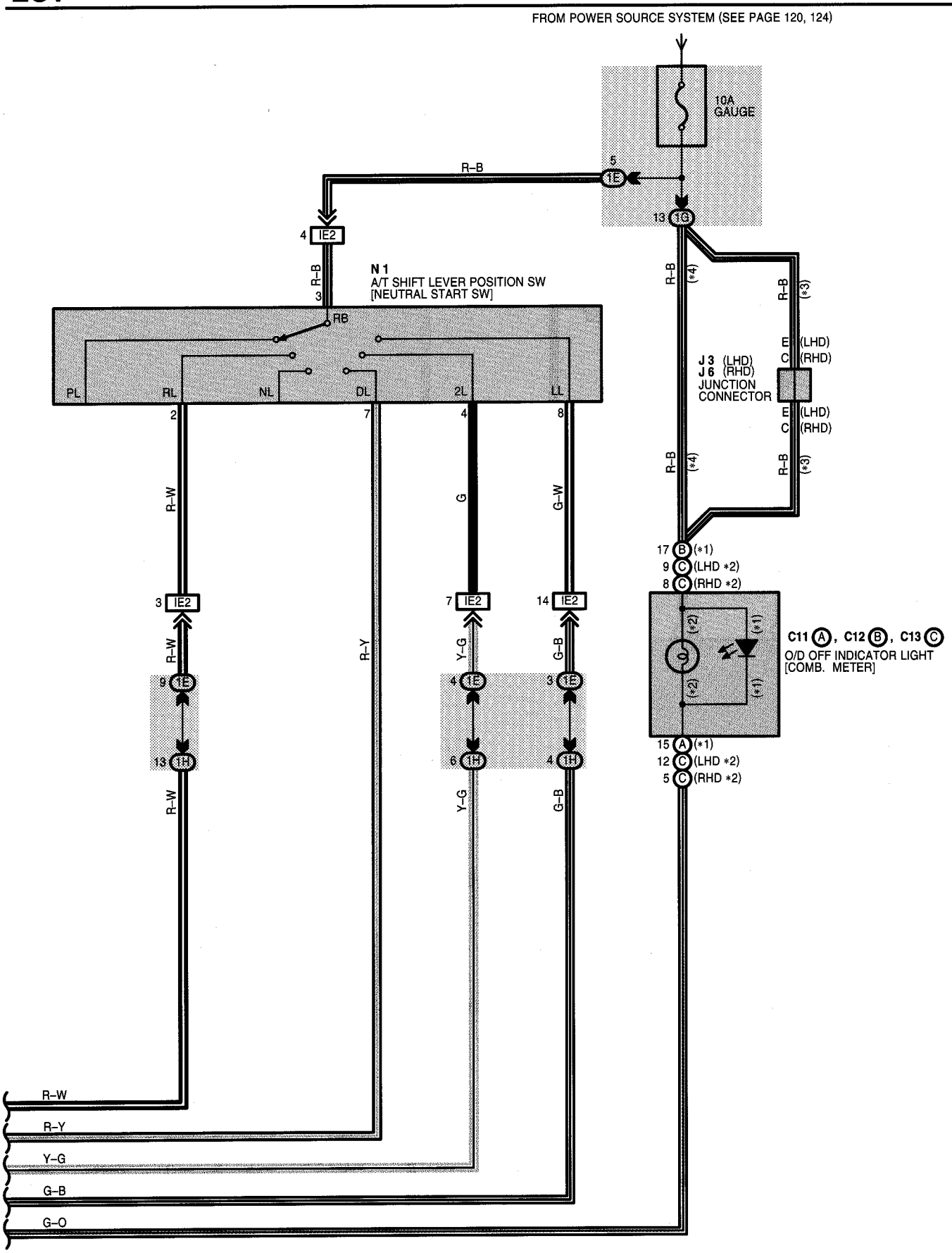

SYSTEM OUTLINE

Previous automatic transaxle have selected each gear shift using the mechanically controlled throttle hydraulic pressure, governor hydraulic pressure and lock-up hydraulic pressure. The ECT, however, electrically controls the line pressure and lock-up pressure etc., through the solenoid valve. Engine and ECT ECU controls each solenoid valve based on the input signals from each sensor, which makes smooth driving possible by shift selection for each gear that is most appropriate to the driving conditions at that time.

1. GEAR SHIFT OPERATION

During driving, the engine and ECU ECT selects the shift for each gear which is most appropriate to the driving conditions, based on input signals from the EFI water temp. sensor to TERMINAL THW of the engine and ECT ECU, and also the input signals to TERMINAL NT+ of the engine and ECT ECU from the turbine speed sensor devoted to the direct clutch. Current is then output to the ECT solenoid. When shifting to 1st gear, current flows from TERMINAL S1 of the engine and ECT ECU to TERMINAL 5 of the ECT solenoid to GROUND, and from TERMINAL S2 of the engine and ECT ECU to TERMINAL 10 of the ECT solenoid to GROUND, and continuity to solenoids No.1 and No.2 causes the shift.
For the 2nd gear, current flows from TERMINAL S1 of the engine and ECT ECU to TERMINAL 5 of the ECT solenoid to GROUND, and continuity to the solenoid No.1 causes the shift.
For the 3rd gear, there is no continuity to either No.1 or No.2 solenoid.
Shifting into 4th gear (Overdrive) takes place when current flows from TERMINAL S2 of the engine and ECT ECU to TERMINAL 10 of the ECT solenoid to GROUND, and continuity to the solenoid No.2 causes the shift.

2. LOCK-UP OPERATION

When the engine and ECT ECU judges from each signal that lock-up operation conditions have been met, current flows from TERMINAL SL of the engine and ECT ECU to TERMINAL 4 of the ECT solenoid to GROUND, causing continuity to the lock-up solenoid and causing lock-up operation.

3. CLUTCH PRESSURE CONTROL

The ECT solenoid is controlled by the current from TERMINAL SL of the engine and ECT ECU, and controls the accumulator hydraulic pressure.
As a result, the clutch to hydraulic pressure is adjusted precisely, and allows stable shift change.

4. LINE PRESSURE CONTROL

The ECT solenoid is controlled by the current from TERMINAL SLT+ of the engine and ECT ECU, and controls the throttle hydraulic pressure.
As a result, the line pressure can be controlled precisely, and the to hydraulic pressure is adjusted according to the shift change condition, and allows smooth shift change.

5. SHIFTING CONTROL IN UPHILL/DOWNHILL TRAVELING

This system determines whether the vehicle is traveling on an incline or decline from the throttle opening angle, vehicle acceleration condition and brake pedal operation, and controls the shift up to O/D to allow smooth driving.

6. CLUTCH TO CLUTCH CONTROL

When shifting from the 3rd gear to the 4th gear, the current from the engine and ECT ECU TERMINAL ST controls the ECT solenoid, to control the drain orifice hydraulic pressure (Switch orifice). The ECT solenoid is also controlled by the current from the engine and ECT ECU TERMINAL SLT+, to adjust the hydraulic pressure precisely, which ensures smooth shifting.

7. STOP LIGHT SW CIRCUIT

If the brake pedal is depressed (Stop light SW on) when driving in lock-up condition, a signal is input to TERMINAL STP of the engine and ECT ECU, the engine and ECT ECU operates and continuity to the lock-up solenoid is cut.

8. OVERDRIVE CIRCUIT

* Overdrive on
  When the engine is turned on from ignition off, the engine and ECT ECU turns the O/D on. When the O/D main SW is pushed while the O/D is off, a signal is input into TERMINAL OD2 of the engine and ECT ECU, and the O/D is turned on by the engine and ECT ECU. In this case, the engine and ECT ECU controls the gear shift according to the vehicle's driving condition, using the O/D range. At this time, the O/D off indicator light is off.
* Overdrive off
  When the O/D main SW is pushed while the O/D is on, a signal is input into TERMINAL OD2 of the engine and ECT ECU, and the O/D is turned off. At this time, the current flows through the O/D off indicator light to TERMINAL OD2 of the engine and ECT ECU. As a result, the O/D off indicator light turns on, and the engine and ECT ECU controls the gear shift according to the vehicle's driving condition, without using the O/D range.

SERVICE HINTS

E3 (A), E4 (B), E5 (C), E6 (D) ENGINE AND ECT ECU

BATT–E1 : Always approx. **9–14** volts
+B–E1 : **9–14** volts with the ignition SW on and the engine stopping
NSW–E1 : **9–14** volts with the ignition SW on and the shift lever except **P** and **N** position
0–3 volts with the ignition SW on and the shift lever **P** or **N** position
STA–E1 : **6.0** volts or more with the engine cranking
STP–E1 : **7.5–14** volts with the brake pedal depressed

N1 A/T SHIFT LEVER POSITION SW [NEUTRAL START SW]

3–2 : Closed with the shift lever in **R** position
3–7 : Closed with the shift lever in **D** position
3–4 : Closed with the shift lever in **2** position
3–8 : Closed with the shift lever in **L** position

: PARTS LOCATION

Code		See Page	Code		See Page	Code	See Page
C11	A	86 (LHD)	E3	A	92 (RHD)	J6	93 (RHD)
		92 (RHD)	E4	B	86 (LHD)	K2	87 (LHD)
C12	B	86 (LHD)			92 (RHD)	N1	85 (LHD)
		92 (RHD)	E5	C	86 (LHD)		91 (RHD)
C13	C	86 (LHD)			92 (RHD)	O2	87 (LHD)
		92 (RHD)	E6	D	86 (LHD)		93 (RHD)
D5		86 (LHD)			92 (RHD)	S8	87 (LHD)
		92 (RHD)	F12		84 (LHD)		93 (RHD)
E1		84 (LHD)			90 (RHD)	T1	85 (LHD)
		90 (RHD)	I10		87 (LHD)		91 (RHD)
E2		84 (LHD)			93 (RHD)	T2	85 (LHD)
		90 (RHD)	J3		87 (LHD)		91 (RHD)
E3	A	86 (LHD)	J6		87 (LHD)		

: RELAY BLOCKS

Code	See Page	Relay Blocks (Relay Block Location)
1	78	Engine Room R/B No.1 (Engine Compartment Left)

: JUNCTION BLOCK AND WIRE HARNESS CONNECTOR

Code	See Page	Junction Block and Wire Harness (Connector Location)
1A	80	Engine Room Main Wire and Instrument Panel J/B (Lower Finish Panel)
1B		
1E	81	Instrument Panel Wire and Instrument Panel J/B (Lower Finish Panel)
1F		
1G		
1H		
1O		
1P		

: CONNECTOR JOINING WIRE HARNESS AND WIRE HARNESS

Code	See Page	Joining Wire Harness and Wire Harness (Connector Location)
ID2	100 (LHD)	Engine Room Main Wire and Instrument Panel Wire (Left Side of Instrument Panel)
	108 (RHD)	Engine Room Main Wire and Instrument Panel Wire (Right Side of Instrument Panel)
IE1	100 (LHD)	Engine Wire and Instrument Panel Wire (Behind the Glove Box)
	108 (RHD)	
IE2	100 (LHD)	
	108 (RHD)	

▽ : GROUND POINTS

Code	See Page	Ground Points Location
EA	96 (LHD)	Front Right Fender Apron
	104 (RHD)	
EB	96 (LHD)	Engine Block
	104 (RHD)	
ID	98 (LHD)	Left Kick Panel
IF	98 (LHD)	Right Kick Panel
	106 (RHD)	

⬡ : SPLICE POINTS

Code	See Page	Wire Harness with Splice Points	Code	See Page	Wire Harness with Splice Points
I4	100 (LHD)	Engine Wire	I4	108 (RHD)	Engine Wire

MEMO

NOTICE: When inspecting or repairing the SRS, perform the operation in accordance with the following precautionary instructions and the procedure and precautions in the Repair Manual for the applicable model year.

- Malfunction symptoms of the SRS are difficult to confirm, so the DTCs become the most important source of information when troubleshooting. When troubleshooting the SRS, always inspect the DTCs before disconnecting the battery.
- **Work must be started after 90 seconds from when the ignition switch is turned to the "LOCK" position and the negative (-) terminal cable is disconnected from the battery.**
  (The SRS is equipped with a back-up power source so that if work is started within 90 seconds from disconnecting the negative (-) terminal cable of the battery, the SRS may be deployed.)
- When the negative (-) terminal cable is disconnected from the battery, the memory of the clock and audio system will be canceled. So before starting work, make a record of the contents memorized in the audio memory system. When work is finished, reset the audio systems as they were before and adjust the clock. To avoid erasing the memory in each memory system, never use a back-up power supply from outside the vehicle.
- Before repairs, remove the airbag sensor if shocks are likely to be applied to the sensor during repairs.
- Do not expose the steering wheel pad, front passenger airbag assembly, side airbag assembly, seat belt pretensioner, center airbag sensor assembly, front airbag sensor assembly or side airbag sensor assembly directly to hot air or flames.
- Even in cases of a minor collision where the SRS does not deploy, the steering wheel pad, front passenger airbag assembly, side airbag assembly, seat belt pretensioner, center airbag sensor assembly, front airbag sensor assembly and side airbag sensor assembly should be inspected.
- Never use SRS parts from another vehicle. When replacing parts, replace them with new parts.
- Never disassemble and repair the steering wheel pad, front passenger airbag assembly, side airbag assembly, seat belt pretensioner, center airbag sensor assembly, front airbag sensor assembly or side airbag sensor assembly in order to reuse it.
- If the steering wheel pad, front passenger airbag assembly, side airbag sensor assembly, seat belt pretensioner, center airbag sensor assembly, front airbag sensor assembly or side airbag sensor assembly has been dropped, or if there are cracks, dents or other defects in the case, bracket or connector, replace them with new ones.
- Use a volt/ohmmeter with high impedance (10 kΩ/V minimum) for troubleshooting the system's electrical circuits.
- Information labels are attached to the periphery of the SRS components. Follow the instructions on the notices.
- After work on the SRS is completed, perform the SRS warning light check.
- If the vehicle is equipped with a mobile communication system, refer to the precaution in the IN section of the Repair Manual.

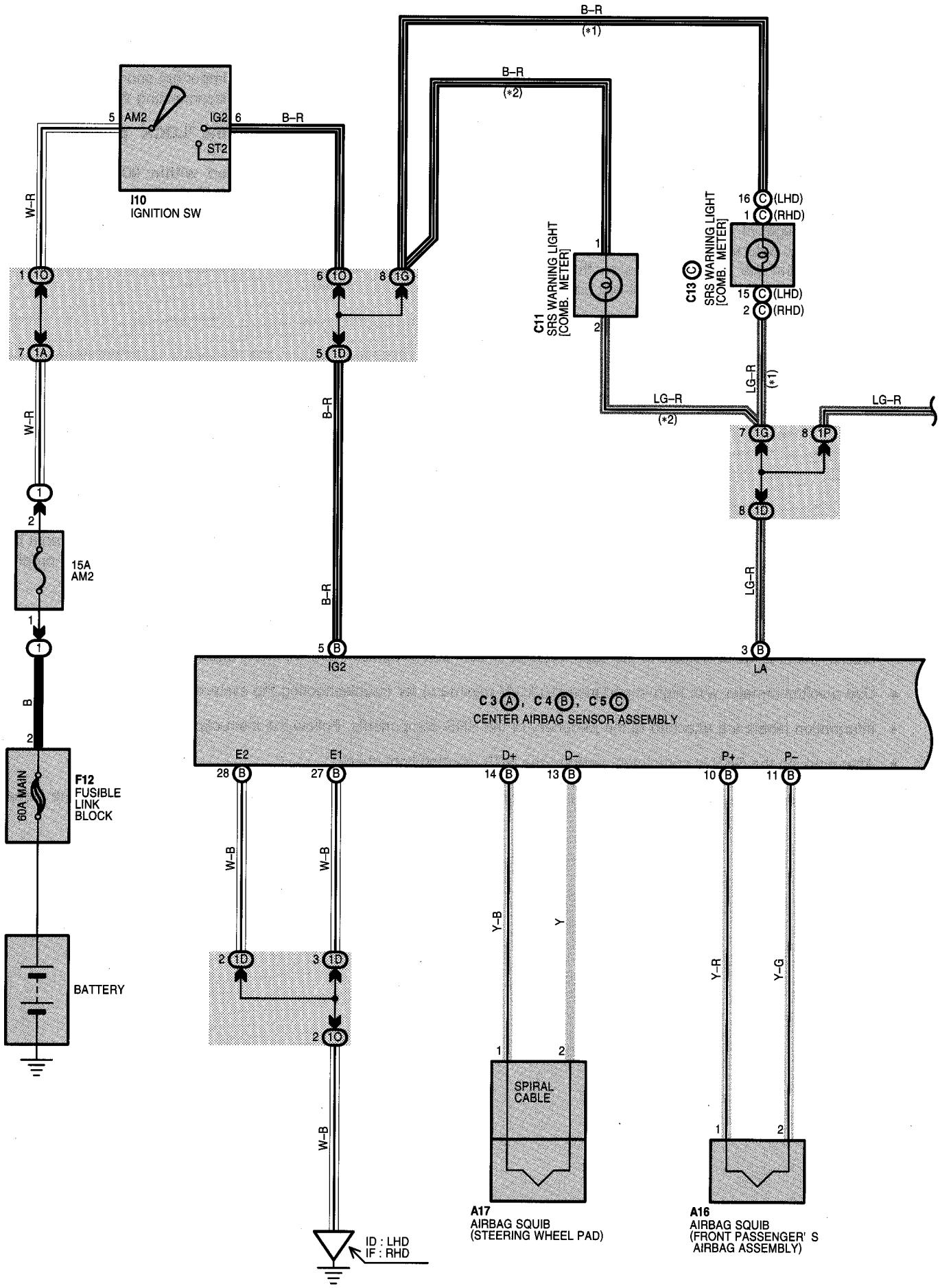
B–R
(*1)
B–R
(*2)
5 AM2
IG2 6
B–R
ST2
I10
IGNITION SW
W–R
1 1O
6 1O
8 1G
7 1A
5 1D
W–R
B–R
1
2
15A
AM2
1
1
B
2
60A MAIN
F12
FUSIBLE
LINK
BLOCK
BATTERY
B–R
5 B
IG2
C11
SRS WARNING LIGHT
[COMB. METER]
1
2
LG–R
(*2)
16 C (LHD)
1 C (RHD)
C13 C
SRS WARNING LIGHT
[COMB. METER]
15 C (LHD)
2 C (RHD)
LG–R
(*1)
LG–R
7 1G
8 1P
8 1B
LG–R
3 B
LA
C3 A, C4 B, C5 C
CENTER AIRBAG SENSOR ASSEMBLY
E2
E1
D+
D–
P+
P–
28 B
27 B
14 B
13 B
10 B
11 B
W–B
W–B
Y–B
Y
Y–R
Y–G
2 1D
3 1D
2 1D
W–B
SPIRAL
CABLE
1
2
1
2
ID : LHD
IF : RHD
A17
AIRBAG SQUIB
(STEERING WHEEL PAD)
A16
AIRBAG SQUIB
(FRONT PASSENGER' S
AIRBAG ASSEMBLY)

* 1 : DIGITAL METER TYPE
* 2 : ANALOG METER TYPE

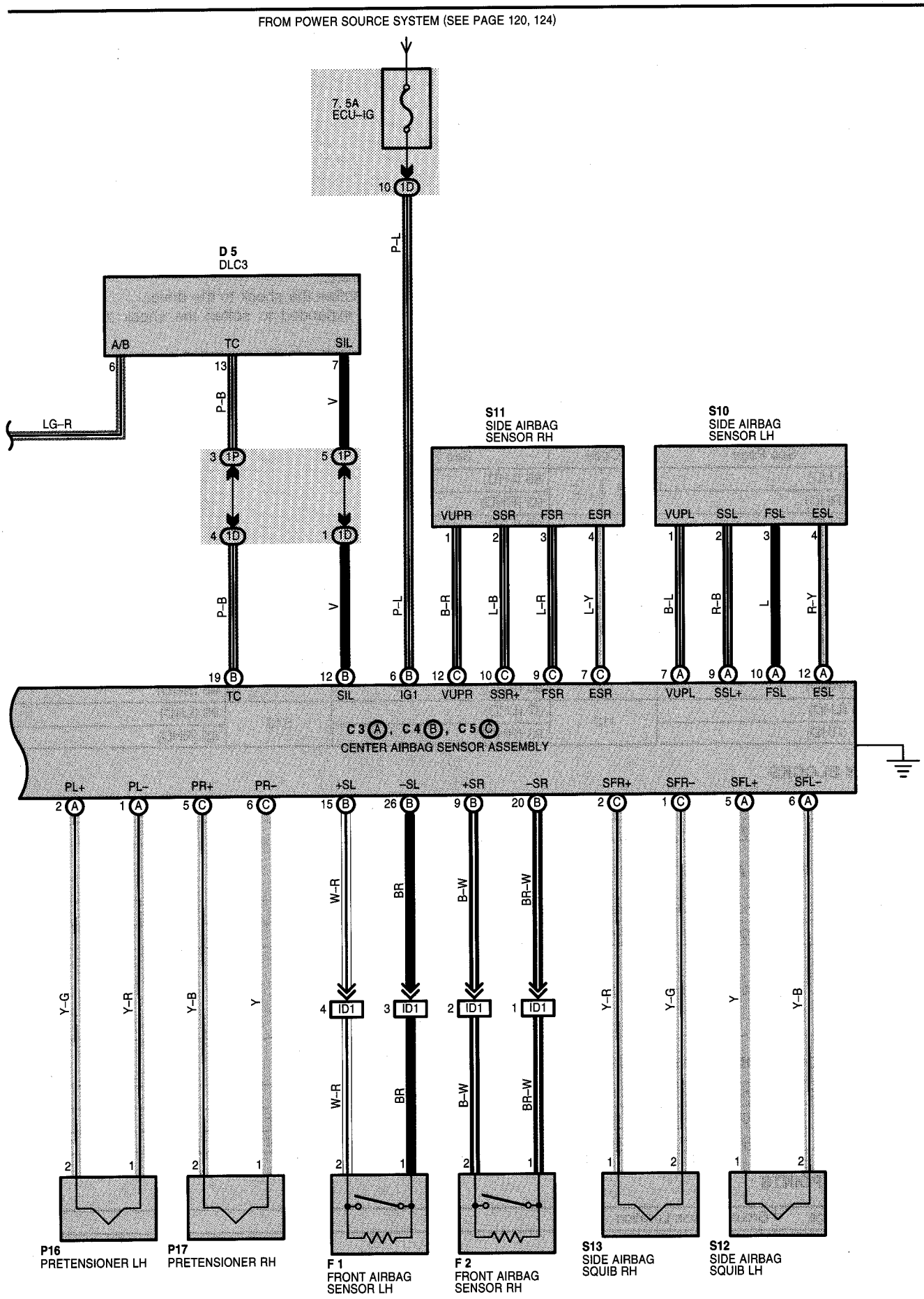

SYSTEM OUTLINE

The SRS is a driver and front passenger protection device which has a supplemental role to the seat belts.
When the ignition SW is on does the current flow from the ECU-IG fuse to TERMINAL (B) 6 of the center airbag sensor assembly.
If an accident occurs while driving, when the frontal impact exceeds a set level, current from the ECU-IG fuse flows to TERMINALS (B) 14, (B) 10, (A) 2 and (C) 5 of the center airbag sensor assembly to TERMINAL 1 of the airbag squibs and the pretensioners to TERMINAL 2 to TERMINALS (B) 13, (B) 11, (A) 1 and (C) 6 of the center airbag sensor assembly to TERMINAL (B) 27, (B) 28 or BODY GROUND to GROUND, so that current flows to the front airbag squibs and the pretensioners and causes them to operate.
When the side impact also exceeds a set level, current from the ECU-IG fuse flows to TERMINALS (C) 2, (A) 5, (A) 2 and (C) 5 of the center airbag sensor assembly to TERMINAL 1 of the side airbag squibs and the pretensioners to TERMINAL 2 to TERMINALS (C) 1, (A) 6, (A) 1, and (C) 6 of the center airbag sensor assembly to TERMINAL (B) 27, (B) 28 or BODY GROUND to GROUND, causing side airbag squibs and the pretensioners to operate.
The airbag stored inside the steering wheel pad is instantaneously expanded to soften the shock to the driver.
The airbag stored inside the passenger's instrument panel is instantaneously expanded to soften the shock to the front passenger.
Side airbags are instantaneously expanded to soften the shock of side to the driver and front passenger.
The pretensioners make sure of the seat belt restrainability.

○ : PARTS LOCATION

Code	See Page	Code	See Page	Code	See Page
A16	86 (LHD)	C13 C	86 (LHD)	P16	89 (LHD)
	92 (RHD)		92 (RHD)		95 (RHD)
A17	86 (LHD)	D5	86 (LHD)	P17	89 (LHD)
	92 (RHD)		92 (RHD)		95 (RHD)
C3 A	86 (LHD)	F1	84 (LHD)	S10	89 (LHD)
	92 (RHD)		90 (RHD)		95 (RHD)
C4 B	86 (LHD)	F2	84 (LHD)	S11	89 (LHD)
	92 (RHD)		90 (RHD)		95 (RHD)
C5 C	86 (LHD)	F12	84 (LHD)	S12	89 (LHD)
	92 (RHD)		90 (RHD)		95 (RHD)
C11	86 (LHD)	I10	87 (LHD)	S13	89 (LHD)
	92 (RHD)		93 (RHD)		95 (RHD)

▭ : RELAY BLOCKS

Code	See Page	Relay Blocks (Relay Block Location)
1	78	Engine Room R/B No.1 (Engine Compartment Left)

▭ : JUNCTION BLOCK AND WIRE HARNESS CONNECTOR

Code	See Page	Junction Block and Wire Harness (Connector Location)
1A	80	Engine Room Main Wire and Instrument Panel J/B (Lower Finish Panel)
1D	81	Instrument Panel Wire and Instrument Panel J/B (Lower Finish Panel)
1G		
1O		
1P		

▭ : CONNECTOR JOINING WIRE HARNESS AND WIRE HARNESS

Code	See Page	Joining Wire Harness and Wire Harness (Connector Location)
ID1	100 (LHD)	Engine Room Main Wire and Instrument Panel Wire (Left Side of Instrument Panel)
	108 (RHD)	Engine Room Main Wire and Instrument Panel Wire (Right Side of Instrument Panel)

▽ : GROUND POINTS

Code	See Page	Ground Points Location
ID	98 (LHD)	Left Kick Panel
IF	106 (RHD)	Right Kick Panel

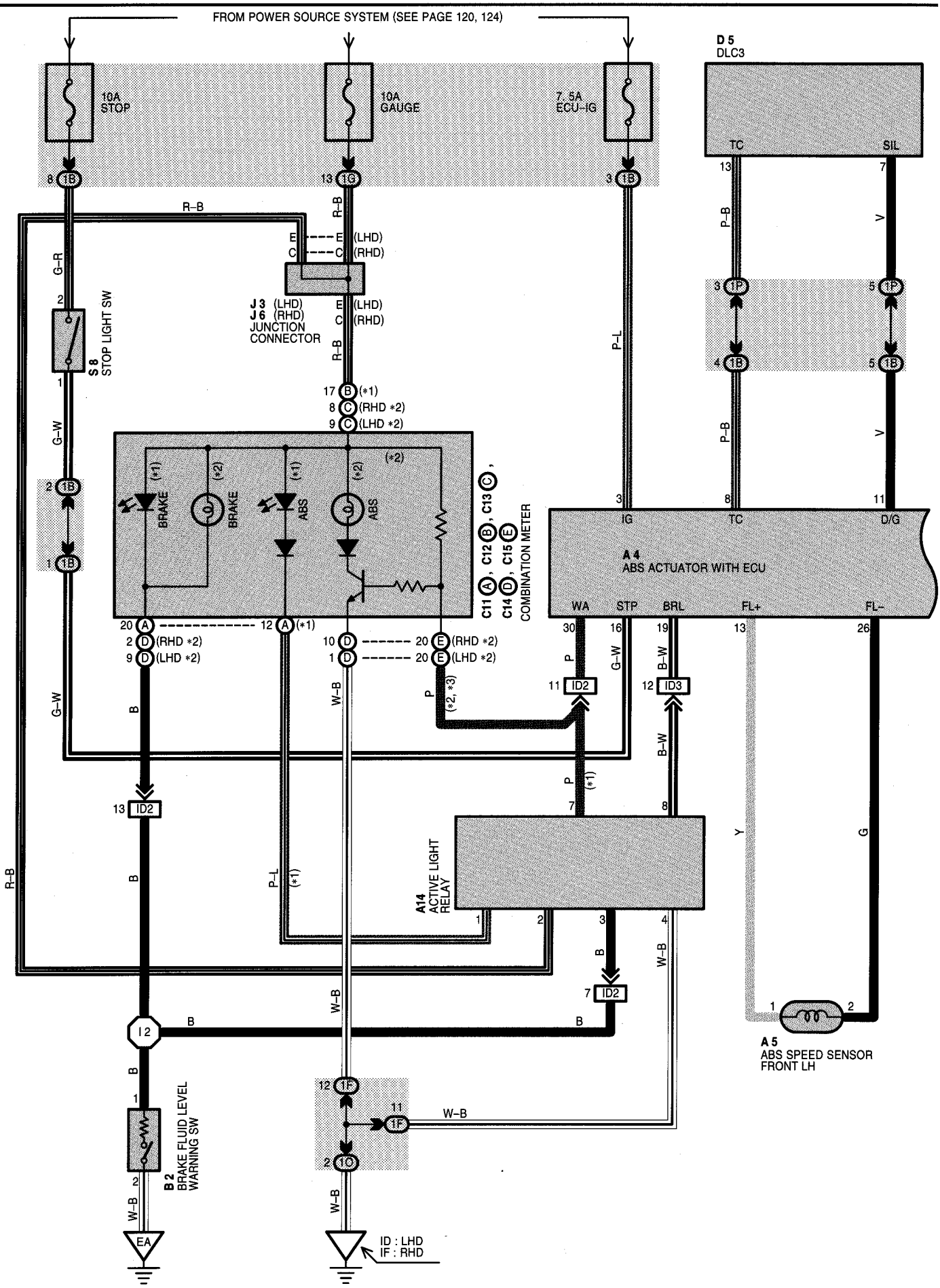
FROM POWER SOURCE SYSTEM (SEE PAGE 120, 124)
10A STOP
10A GAUGE
7.5A ECU-IG
D 5 DLC3
TC
SIL
J 3 (LHD)
J 6 (RHD)
JUNCTION CONNECTOR
S 8 STOP LIGHT SW
BRAKE
ABS
C11 A, C12 B, C13 C, C14 D, C15 E
COMBINATION METER
A 4 ABS ACTUATOR WITH ECU
IG
D/G
WA
STP
BRL
FL+
FL-
ID2
ID3
A14 ACTIVE LIGHT RELAY
A 5 ABS SPEED SENSOR FRONT LH
B 2 BRAKE FLUID LEVEL WARNING SW
EA
ID : LHD
IF : RHD

* 1 : ANALOG METER TYPE
* 2 : DIGITAL METER TYPE

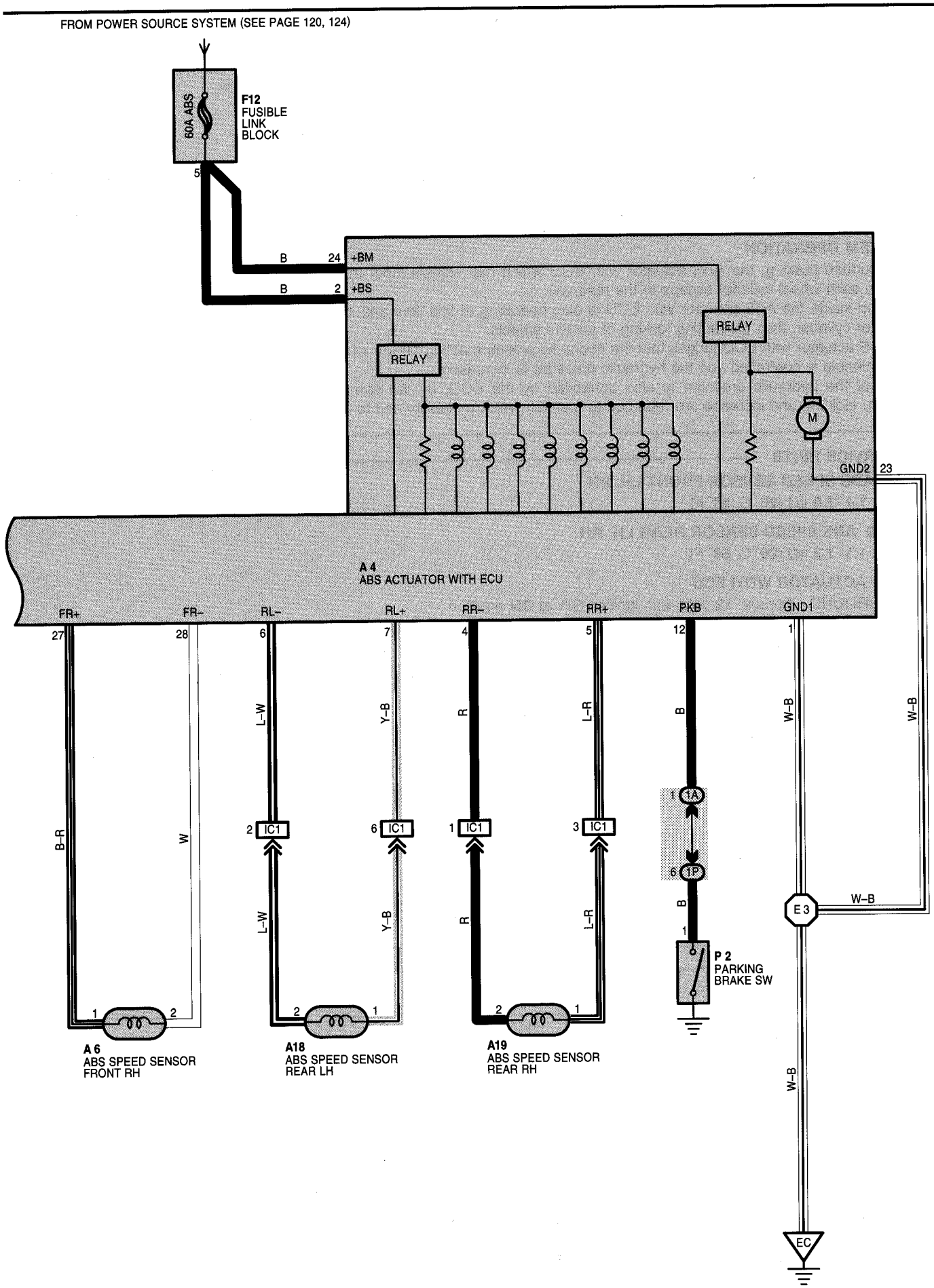

SYSTEM OUTLINE

This system controls the respective brake fluid pressures acting on the brake cylinders of the right front wheel, left front wheel, and rear wheels when the brakes are applied in a panic stop so that the wheels do not lock.
This results in improved directional stability and steerability during panic braking.

1. INPUT SIGNAL

(1) Speed sensor signal
The speed of the wheels is detected and input to TERMINALS FL+, FR+, RL+ and RR+ of the ABS actuator with ECU.

(2) Stop light SW signal
A signal is input to TERMINAL STP of the ABS actuator with ECU when the brake pedal is depressed.

2. SYSTEM OPERATION

During sudden braking, the ABS actuator with ECU which has signals input from each sensor lets the hydraulic pressure acting on each wheel cylinder escape to the reservoir.
The pump inside the ABS actuator with ECU is also operating at this time and it returns the brake fluid from the reservoir to the master cylinder, thus preventing locking of vehicle wheels.
If the ABS actuator with ECU judges that the hydraulic pressure acting on the wheel cylinder is insufficient, the current acting on the solenoid is controlled and the hydraulic pressure is increased.
Holding of the hydraulic pressure is also controlled by the ECU, by the same method as above, by repeated pressure reduction. Holding and increase are repeated to maintain vehicle stability and to improve steerability during sudden braking.

SERVICE HINTS

A5, A6 ABS SPEED SENSOR FRONT LH, RH
1-2 : **1.4-1.8** kΩ (**20**°C, **68**°F)

A18, A19 ABS SPEED SENSOR REAR LH, RH
1-2 : **1.1-1.3** kΩ (**20**°C, **68**°F)

A4 ABS ACTUATOR WITH ECU
3-GROUND : Approx. **12** volts with ignition SW at **ON** position
16-GROUND : Approx. **12** volts with stop light SW on (Brake pedal depressed)
1, 23-GROUND : Always continuity

S8 STOP LIGHT SW
1-2 : Closed with brake pedal depressed

: PARTS LOCATION

Code	See Page	Code		See Page	Code	See Page
A4	84 (LHD)	B2		84 (LHD)	D5	86 (LHD)
	90 (RHD)			90 (RHD)		92 (RHD)
A5	84 (LHD)	C11	A	86 (LHD)	F12	84 (LHD)
	90 (RHD)			92 (RHD)		90 (RHD)
A6	84 (LHD)	C12	B	86 (LHD)	J3	87 (LHD)
	90 (RHD)			92 (RHD)	J6	87 (LHD)
A14	86 (LHD)	C13	C	86 (LHD)		93 (RHD)
	92 (RHD)			92 (RHD)	P2	87 (LHD)
A18	88 (LHD)	C14	D	86 (LHD)		93 (RHD)
	94 (RHD)			92 (RHD)	S8	87 (LHD)
A19	88 (LHD)	C15	E	86 (LHD)		93 (RHD)
	94 (RHD)			92 (RHD)		

: JUNCTION BLOCK AND WIRE HARNESS CONNECTOR

Code	See Page	Junction Block and Wire Harness (Connector Location)
1A	80	Engine Room Main Wire and Instrument Panel J/B (Lower Finish Panel)
1B		
1F	81	Instrument Panel Wire and Instrument Panel J/B (Lower Finish Panel)
1G		
1O		
1P		

: CONNECTOR JOINING WIRE HARNESS AND WIRE HARNESS

Code	See Page	Joining Wire Harness and Wire Harness (Connector Location)
IC1	98 (LHD)	Engine Room Main Wire and Floor Wire (Left Side of Instrument Panel)
	106 (RHD)	Engine Room Main Wire and Floor Wire (Right Side of Instrument Panel)
ID2	100 (LHD)	Engine Room Main Wire and Instrument Panel Wire (Left Side of Instrument Panel)
	108 (RHD)	Engine Room Main Wire and Instrument Panel Wire (Right Side of Instrument Panel)
ID3	100 (LHD)	Engine Room Main Wire and Instrument Panel Wire (Left Side of Instrument Panel)
	108 (RHD)	Engine Room Main Wire and Instrument Panel Wire (Right Side of Instrument Panel)

: GROUND POINTS

Code	See Page	Ground Points Location
EA	96 (LHD)	Front Right Fender Apron
	104 (RHD)	
EC	96 (LHD)	Front Left Fender Apron
	104 (RHD)	
ID	98 (LHD)	Left Kick Panel
IF	106 (RHD)	Right Kick Panel

: SPLICE POINTS

Code	See Page	Wire Harness with Splice Points	Code	See Page	Wire Harness with Splice Points
E3	96 (LHD)	Engine Room Main Wire	I2	100 (LHD)	Engine Room Main Wire
	104 (RHD)			108 (RHD)	

COMBINATION METER (ANALOG TYPE)

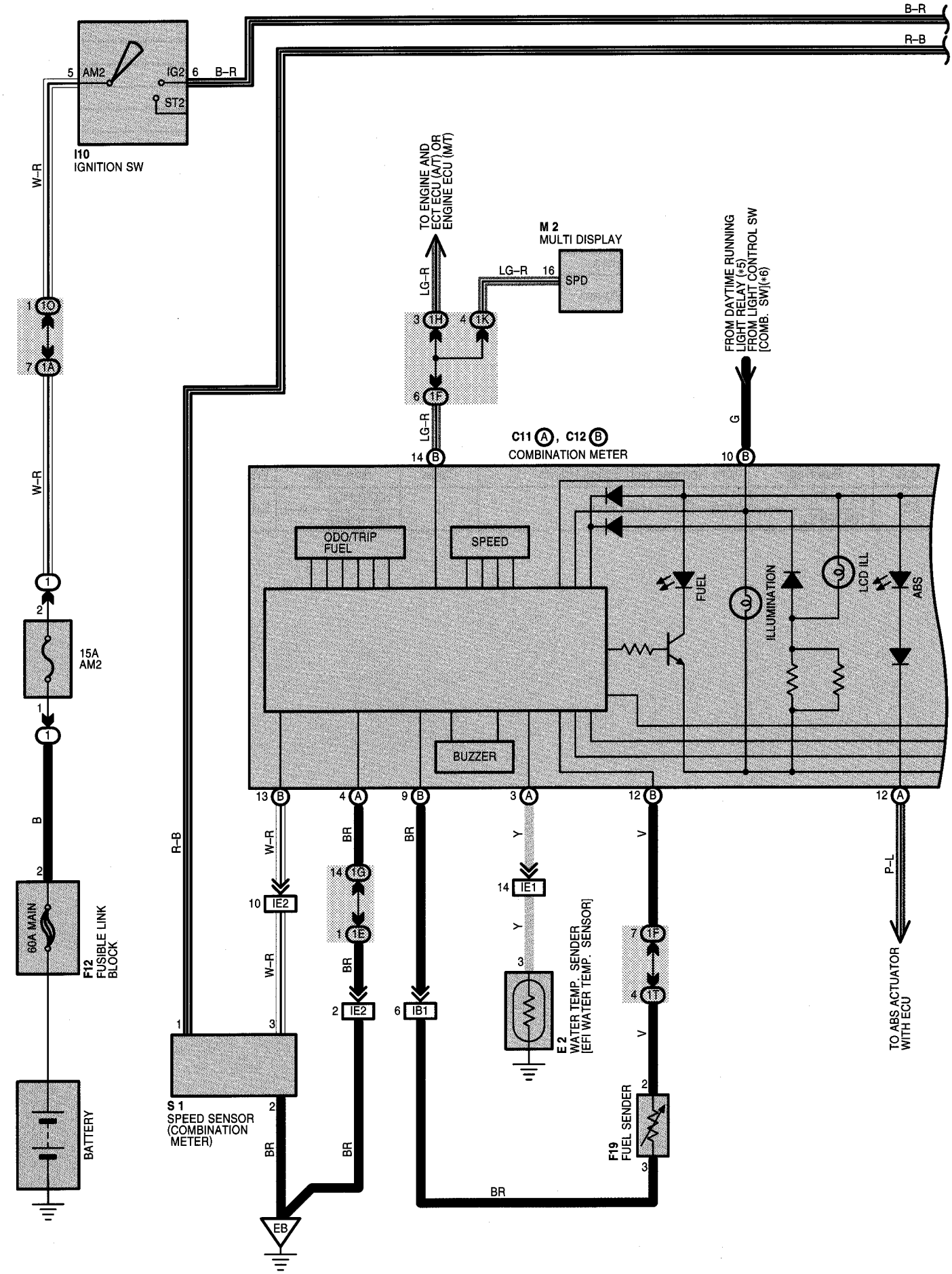

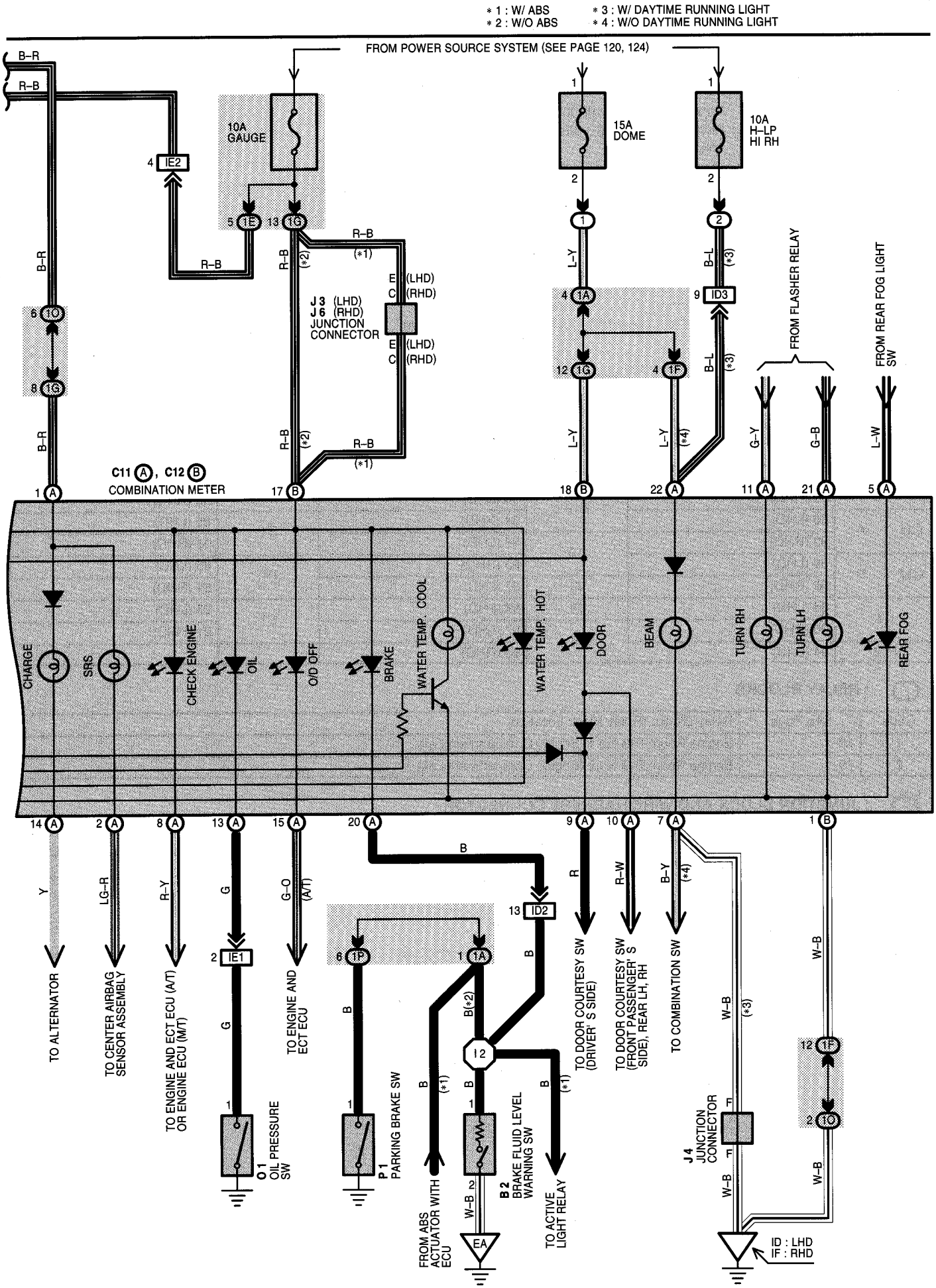
* 1 : W/ ABS
* 2 : W/O ABS
* 3 : W/ DAYTIME RUNNING LIGHT
* 4 : W/O DAYTIME RUNNING LIGHT
FROM POWER SOURCE SYSTEM (SEE PAGE 120, 124)
10A GAUGE
15A DOME
10A H-LP HI RH
J3 (LHD)
J6 (RHD)
JUNCTION CONNECTOR
C11 A, C12 B
COMBINATION METER
FROM FLASHER RELAY
FROM REAR FOG LIGHT SW
CHARGE
SRS
CHECK ENGINE
OIL
O/D OFF
BRAKE
WATER TEMP. COOL
WATER TEMP. HOT
DOOR
BEAM
TURN RH
TURN LH
REAR FOG
TO ALTERNATOR
TO CENTER AIRBAG SENSOR ASSEMBLY
TO ENGINE AND ECT ECU (A/T) OR ENGINE ECU (M/T)
TO ENGINE AND ECT ECU
O1 OIL PRESSURE SW
P1 PARKING BRAKE SW
FROM ABS ACTUATOR WITH ECU
B2 BRAKE FLUID LEVEL WARNING SW
TO ACTIVE LIGHT RELAY
TO DOOR COURTESY SW (DRIVER' S SIDE)
TO DOOR COURTESY SW (FRONT PASSENGER' S SIDE), REAR LH, RH
TO COMBINATION SW
J4 JUNCTION CONNECTOR
ID : LHD
IF : RHD

COMBINATION METER (ANALOG TYPE)

SERVICE HINTS

C11 (A), C12 (B) COMBINATION METER

(A) 1, (B)17-GROUND : Approx. **12** volts with the ignition SW at **ON** position
(B)18-GROUND : Always approx. **12** volts
(A) 4, (B) 1-GROUND : Always continuity
(A)22-GROUND : Always approx. **12** volts (w/o daytime running light)
Approx. **12** volts with the dimmer SW at **HIGH** or **FLASH** position (w/ daytime running light)
(A)22-GROUND : Always continuity (w/ daytime running light)

F19 FUEL SENDER

2-3 : Approx. **4** Ω with the fuel full
Approx. **107** Ω with the fuel empty

O1 OIL PRESSURE SW

1-GROUND : Closed with the oil pressure below **19.6** kpa (**0.2** kgf/cm^2, **2.84** psi)

P2 PARKING BRAKE SW

1-GROUND : Closed with the parking brake lever pulled up

: PARTS LOCATION

Code		See Page	Code	See Page	Code	See Page
B2		84 (LHD)	F12	90 (RHD)	M2	87 (LHD)
		90 (RHD)	F19	88 (LHD)		93 (RHD)
C11	A	86 (LHD)		94 (RHD)	O1	85 (LHD)
		92 (RHD)	I10	87 (LHD)		91 (RHD)
C12	B	86 (LHD)		93 (RHD)	P1	85 (LHD)
		92 (RHD)	J3	87 (LHD)		91 (RHD)
E2		84 (LHD)	J4	87 (LHD)	S1	85 (LHD)
		90 (RHD)	J6	87 (LHD)		91 (RHD)
F12		84 (LHD)		93 (RHD)		

: RELAY BLOCKS

Code	See Page	Relay Blocks (Relay Block Location)
1	78	Engine Room R/B No.1 (Engine Compartment Left)
2	79	Engine Room R/B No.2 (Engine Compartment Left)

: JUNCTION BLOCK AND WIRE HARNESS CONNECTOR

Code	See Page	Junction Block and Wire Harness (Connector Location)
1A	80	Engine Room Main Wire and Instrument Panel J/B (Lower Finish Panel)
1E	81	Instrument Panel Wire and Instrument Panel J/B (Lower Finish Panel)
1F		
1G		
1H		
1K		
1O		
1P		
1T	80	Floor Wire and Instrument Panel J/B (Lower Finish Panel)

: CONNECTOR JOINING WIRE HARNESS AND WIRE HARNESS

Code	See Page	Joining Wire Harness and Wire Harness (Connector Location)
IB1	98 (LHD)	Floor Wire and Instrument Panel Wire (Left Side of Instrument Panel)
	106 (RHD)	Floor Wire and Instrument Panel Wire (Right Side of Instrument Panel)
ID2	100 (LHD)	Engine Room Main Wire and Instrument Panel Wire (Left Side of Instrument Panel)
	108 (RHD)	Engine Room Main Wire and Instrument Panel Wire (Right Side of Instrument Panel)
ID3	100 (LHD)	Engine Room Main Wire and Instrument Panel Wire (Left Side of Instrument Panel)
	108 (RHD)	Engine Room Main Wire and Instrument Panel Wire (Right Side of Instrument Panel)
IE1	100 (LHD)	Engine Wire and Instrument Panel Wire (Behind the Glove Box)
	108 (RHD)	
IE2	100 (LHD)	
	108 (RHD)	

: GROUND POINTS

Code	See Page	Ground Points Location
EA	96 (LHD)	Front Right Fender Apron
	104 (RHD)	
EB	96 (LHD)	Engine Block
	104 (RHD)	
ID	98 (LHD)	Left Kick Panel
IF	106 (RHD)	Right Kick Panel

: SPLICE POINTS

Code	See Page	Wire Harness with Splice Points	Code	See Page	Wire Harness with Splice Points
I2	100 (LHD)	Engine Room Main Wire	I2	108 (RHD)	Engine Room Main Wire

COMBINATION METER (DIGITAL TYPE)

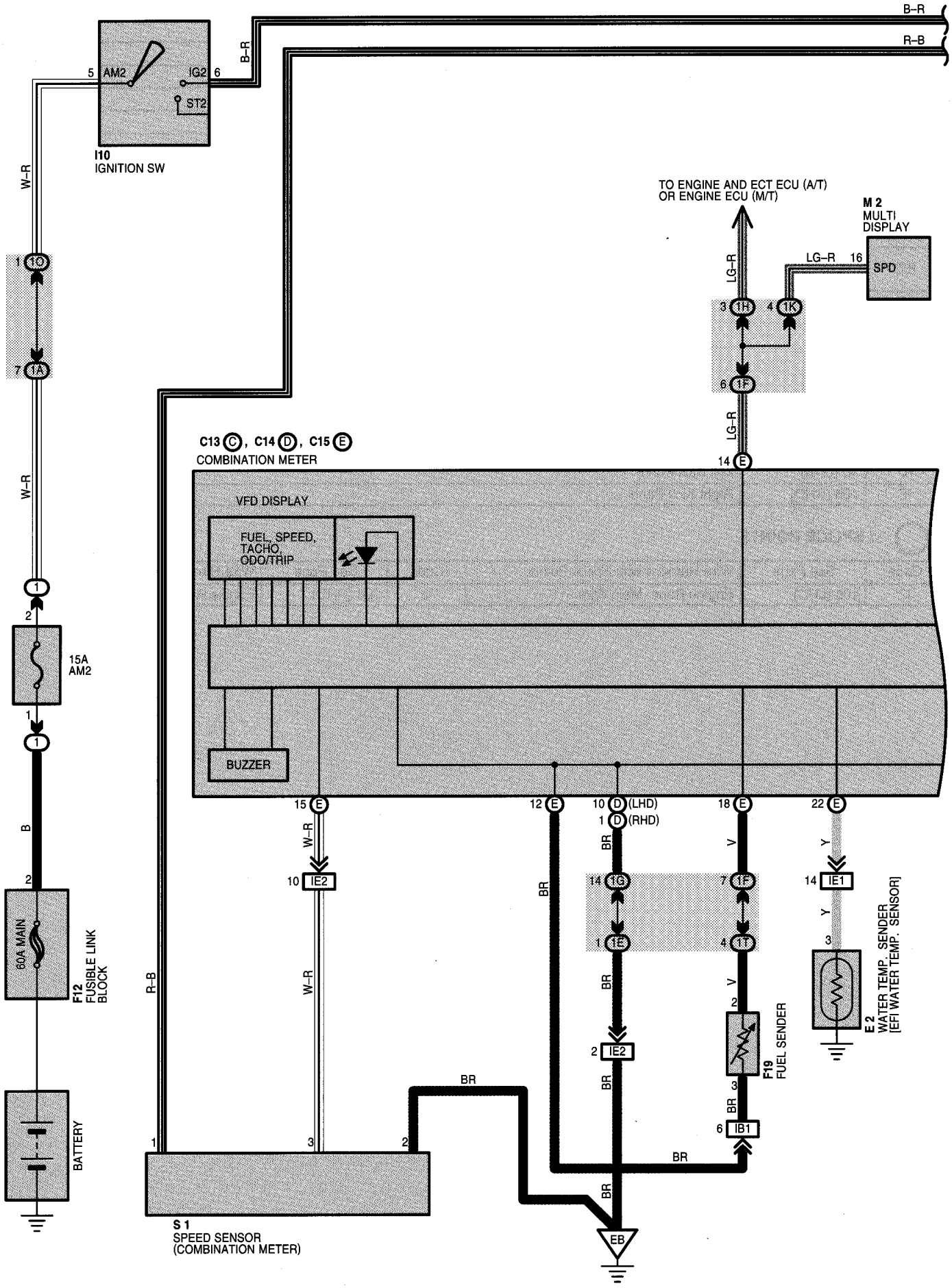

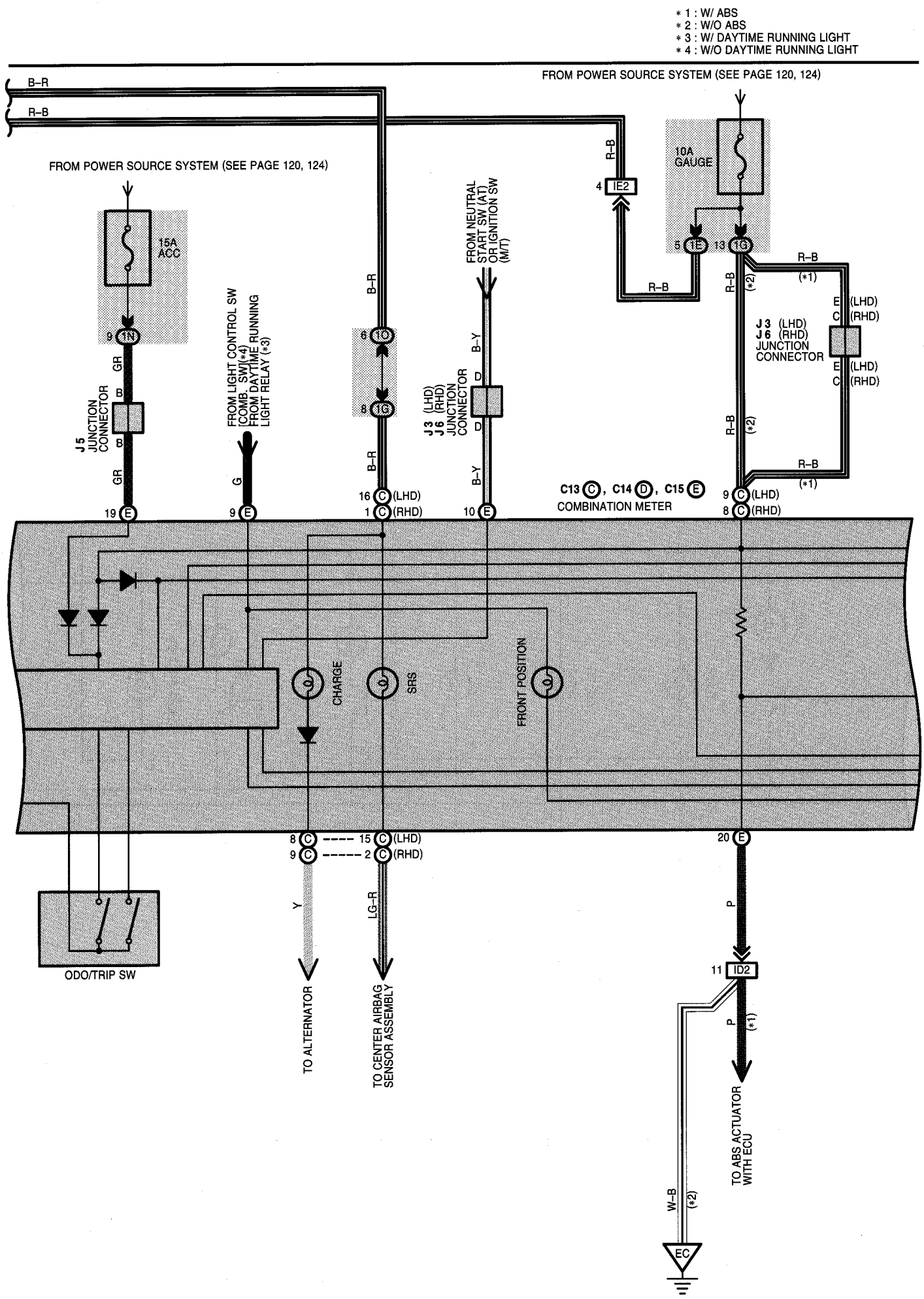
* 1 : W/ ABS
* 2 : W/O ABS
* 3 : W/ DAYTIME RUNNING LIGHT
* 4 : W/O DAYTIME RUNNING LIGHT
FROM POWER SOURCE SYSTEM (SEE PAGE 120, 124)
B–R
R–B
FROM POWER SOURCE SYSTEM (SEE PAGE 120, 124)
15A ACC
10A GAUGE
FROM NEUTRAL START SW (AT) OR IGNITION SW (M/T)
FROM LIGHT CONTROL SW (COMB. SW)(*4) FROM DAYTIME RUNNING LIGHT RELAY (*3)
J5 JUNCTION CONNECTOR
J3 (LHD) J6 (RHD) JUNCTION CONNECTOR
J3 (LHD) J6 (RHD) JUNCTION CONNECTOR
C13 C, C14 D, C15 E
COMBINATION METER
CHARGE
SRS
FRONT POSITION
ODO/TRIP SW
TO ALTERNATOR
TO CENTER AIRBAG SENSOR ASSEMBLY
TO ABS ACTUATOR WITH ECU
EC

COMBINATION METER (DIGITAL TYPE)

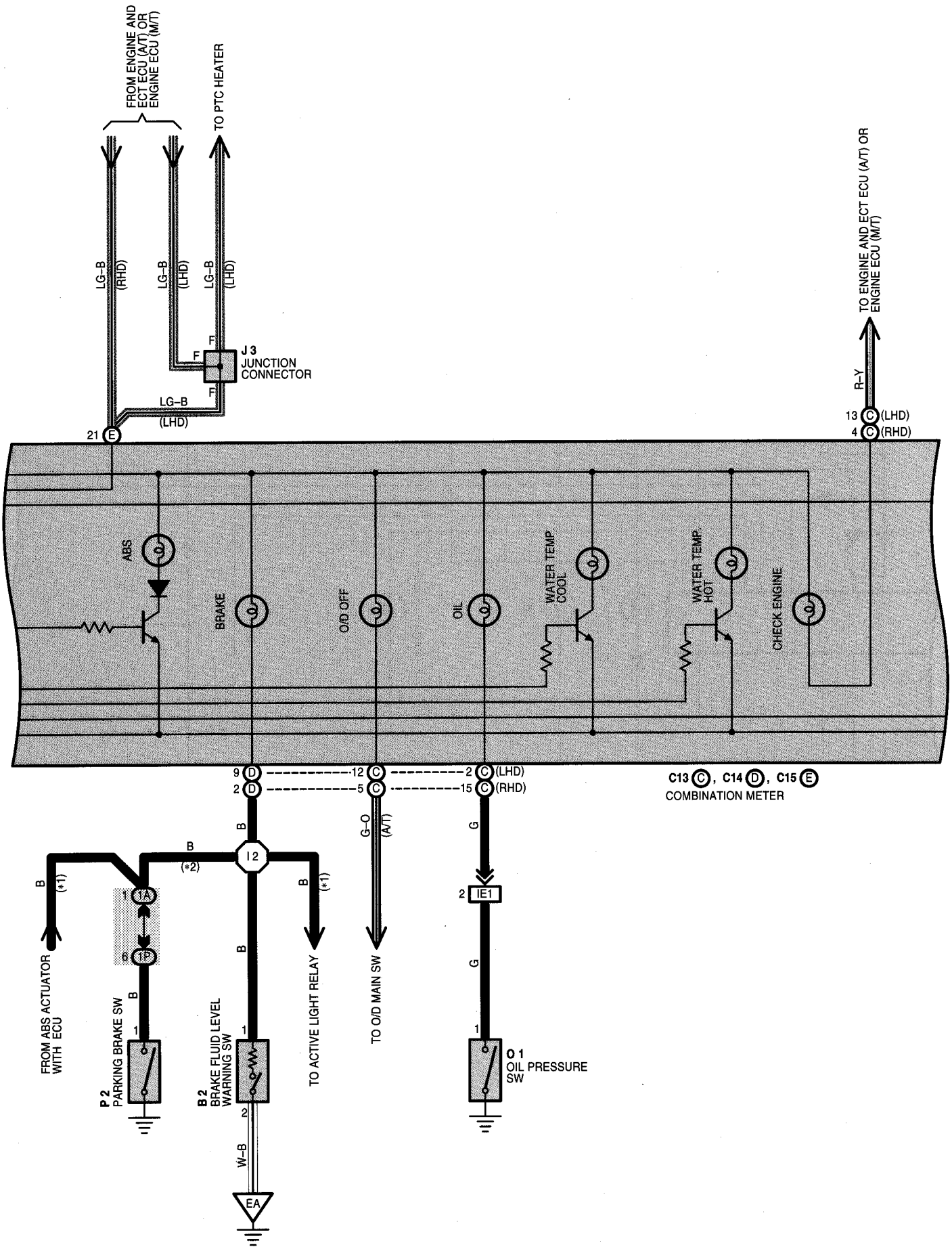

* 1 : W/ ABS
* 2 : W/O ABS
* 3 : W/ DAYTIME RUNNING LIGHT
* 4 : W/O DAYTIME RUNNING LIGHT

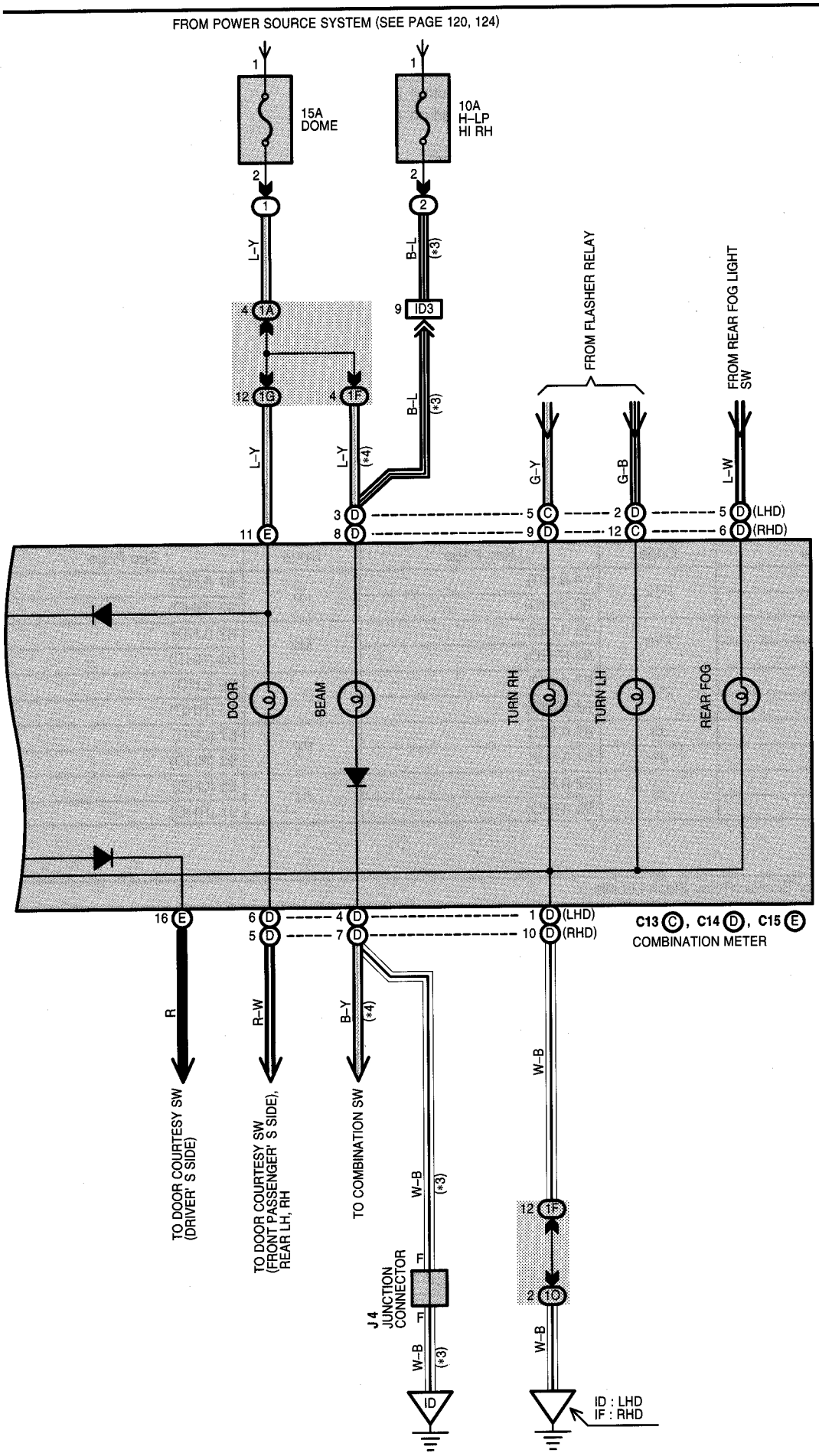

COMBINATION METER (DIGITAL TYPE)

SERVICE HINTS

C13(C), C14 (D), C15 (E) COMBINATION METER

(C) 1, (C) 8-GROUND : Approx. **12** volts with the ignition SW at **ON** position (RHD)
(C) 9, (C)16-GROUND : Approx. **12** volts with the ignition SW at **ON** position (LHD)
(E)11, (E)19-GROUND : Always approx. **12** volts
(D) 3-GROUND : Always approx. **12** volts (LHD w/o daytime running light)
(D) 3-GROUND : Approx. **12** volts with the dimmer SW at **HIGH** or **FLASH** position (LHD w/ daytime running light)
(D) 8-GROUND : Always approx. **12** volts (RHD)
(E)20-GROUND : Always continuity (w/o ABS)
(D) 1, (D)10-GROUND : Always continuity
(D) 4-GROUND : Always continuity (w/ daytime running light)

F19 FUEL SENDER

2-3 : Approx. **4** Ω with the fuel full
Approx. **107** Ω with the fuel empty

O1 OIL PRESSURE SW

1-GROUND : Closed with the oil pressure below **19.6** kpa (**0.2** kgf/cm^2, **2.84** psi)

P2 PARKING BRAKE SW

1-GROUND : Closed with the parking brake lever pulled up

: PARTS LOCATION

Code		See Page	Code	See Page	Code	See Page
B2		84 (LHD)	F12	84 (LHD)	J6	87 (LHD)
		90 (RHD)		90 (RHD)		93 (RHD)
C13	C	86 (LHD)	F19	88 (LHD)	M2	87 (LHD)
		92 (RHD)		94 (RHD)		93 (RHD)
C14	D	86 (LHD)	I10	87 (LHD)	O1	85 (LHD)
		92 (RHD)		93 (RHD)		91 (RHD)
C15	E	86 (LHD)	J3	87 (LHD)	P2	87 (LHD)
		92 (RHD)	J4	87 (LHD)		93 (RHD)
E2		84 (LHD)	J5	87 (LHD)	S1	85 (LHD)
		90 (RHD)		93 (RHD)		91 (RHD)

: RELAY BLOCKS

Code	See Page	Relay Blocks (Relay Block Location)
1	78	Engine Room R/B No.1 (Engine Compartment Left)
2	79	Engine Room R/B No.2 (Engine Compartment Left)

: JUNCTION BLOCK AND WIRE HARNESS CONNECTOR

Code	See Page	Junction Block and Wire Harness (Connector Location)
1A	80	Engine Room Main Wire and Instrument Panel J/B (Lower Finish Panel)
1E	81	Instrument Panel Wire and Instrument Panel J/B (Lower Finish Panel)
1F		
1G		
1H		
1K		
1N		
1O		
1P		
1T	80	Floor Wire and Instrument Panel J/B (Lower Finish Panel)

: CONNECTOR JOINING WIRE HARNESS AND WIRE HARNESS

Code	See Page	Joining Wire Harness and Wire Harness (Connector Location)
IB1	98 (LHD)	Floor Wire and Instrument Panel Wire (Left Side of Instrument Panel)
	106 (RHD)	Floor Wire and Instrument Panel Wire (Right Side of Instrument Panel)
ID2	100 (LHD)	Engine Room Main Wire and Instrument Panel Wire (Left Side of Instrument Panel)
	108 (RHD)	Engine Room Main Wire and Instrument Panel Wire (Right Side of Instrument Panel)
ID3	100 (LHD)	Engine Room Main Wire and Instrument Panel Wire (Left Side of Instrument Panel)
	108 (RHD)	Engine Room Main Wire and Instrument Panel Wire (Right Side of Instrument Panel)
IE1	100 (LHD)	Engine Wire and Instrument Panel Wire (Behind the Glove Box)
	108 (RHD)	
IE2	100 (LHD)	
	108 (RHD)	

: GROUND POINTS

Code	See Page	Ground Points Location
EA	96 (LHD)	Front Right Fender Apron
	104 (RHD)	
EB	96 (LHD)	Engine Block
	104 (RHD)	
EC	96 (LHD)	Front Left Fender Apron
	104 (RHD)	
ID	98 (LHD)	Left Kick Panel
	106 (RHD)	
IF	106 (RHD)	Right Kick Panel

: SPLICE POINTS

Code	See Page	Wire Harness with Splice Points	Code	See Page	Wire Harness with Splice Points
I2	100 (LHD)	Engine Room Main Wire	I4	100 (LHD)	Engine Wire
	108 (RHD)			108 (RHD)	

SEAT HEATER (LHD)

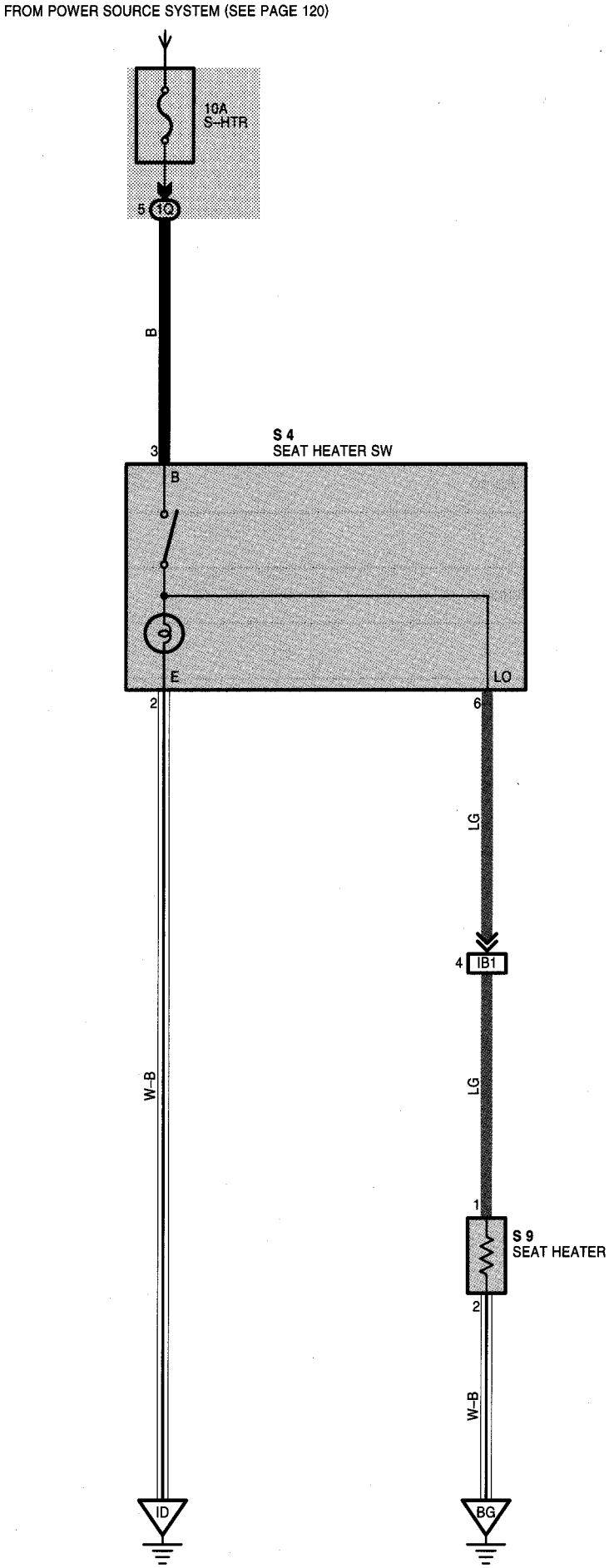

SERVICE HINTS

S4 SEAT HEATER SW

3-GROUND : Approx. **12** volts with the ignition SW at **ON** position
2-GROUND : Always continuity

○ : PARTS LOCATION

Code	See Page	Code	See Page	Code	See Page
S4	87 (LHD)	S9	89 (LHD)		

: JUNCTION BLOCK AND WIRE HARNESS CONNECTOR

Code	See Page	Junction Block and Wire Harness (Connector Location)
1Q	81	Instrument Panel Wire and Instrument Panel J/B (Lower Finish Panel)

□ : CONNECTOR JOINING WIRE HARNESS AND WIRE HARNESS

Code	See Page	Joining Wire Harness and Wire Harness (Connector Location)
IB1	98 (LHD)	Floor Wire and Instrument Panel Wire (Left Side of Instrument Panel)

▽ : GROUND POINTS

Code	See Page	Ground Points Location
ID	98 (LHD)	Left Kick Panel
BG	102 (LHD)	Left Rear Side Quarter Panel

REAR WINDOW DEFOGGER AND MIRROR HEATER

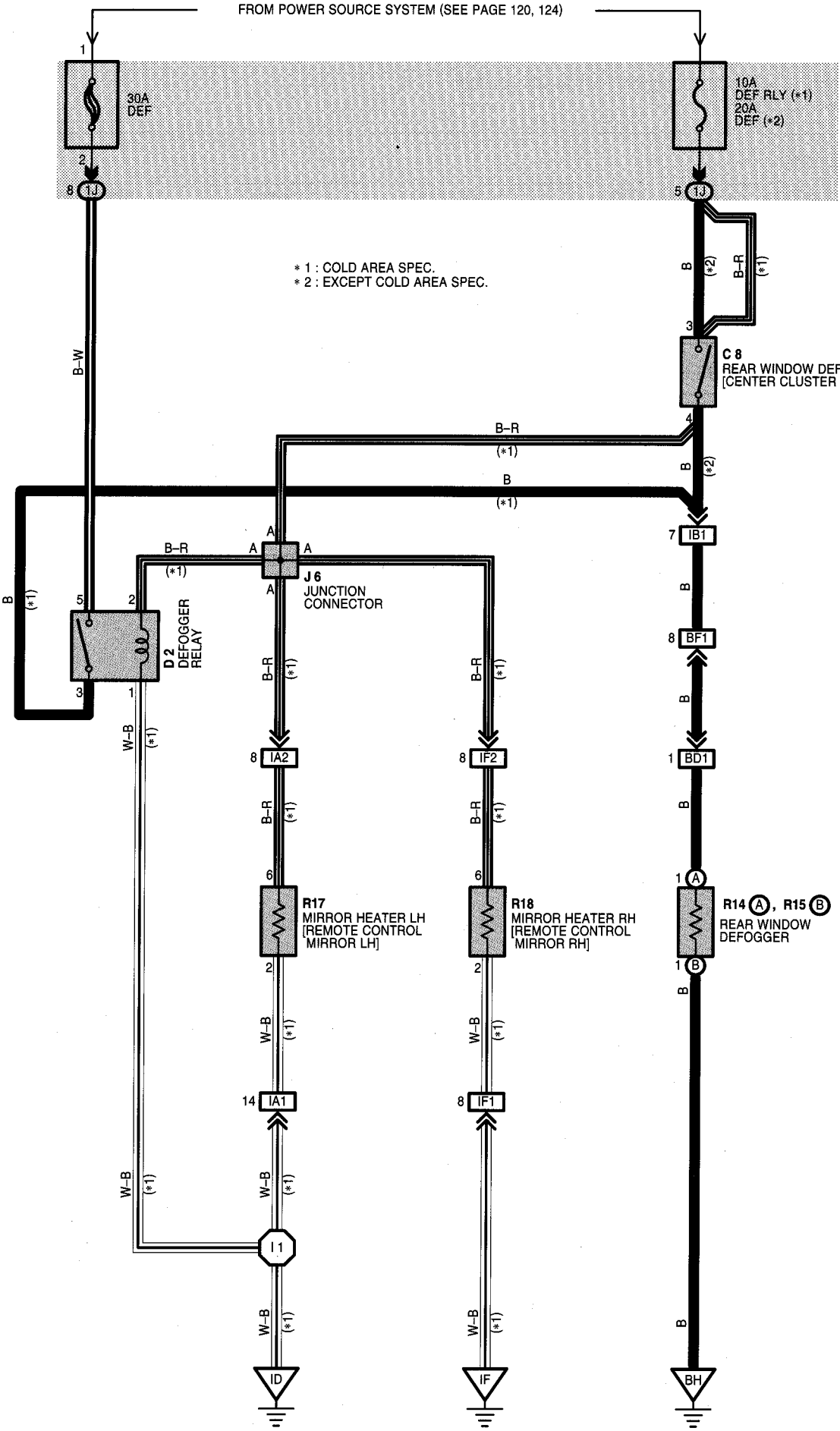

SERVICE HINTS

C8 REAR WINDOW DEFOGGER SW [CENTER CLUSTER SW]

3-GROUND : Approx. **12** volts with the ignition SW at **ON** position

4-GROUND :Continuity with the ignition SW at **ON** position and the rear window defogger SW at **ON** position

D2 DEFOGGER RELAY

5-3 : Closed with the ignition SW at **ON** position and the rear window defogger SW at **ON** position

○ : PARTS LOCATION

Code	See Page	Code		See Page	Code	See Page
C8	86 (LHD)	R14	A	89 (LHD)	R17	89 (LHD)
	92 (RHD)			95 (RHD)	R18	89 (LHD)
D2	86 (LHD)	R15	B	89 (LHD)		
J6	87 (LHD)			95 (RHD)		

: JUNCTION BLOCK AND WIRE HARNESS CONNECTOR

Code	See Page	Junction Block and Wire Harness (Connector Location)
1J	81	Instrument Panel Wire and Instrument Panel J/B (Lower Finish Panel)

: CONNECTOR JOINING WIRE HARNESS AND WIRE HARNESS

Code	See Page	Joining Wire Harness and Wire Harness (Connector Location)
IA1	98 (LHD)	Front Door LH Wire and Instrument Panel Wire (Left Kick Panel)
IA2		
IB1	98 (LHD)	Floor Wire and Instrument Panel Wire (Left Side of Instrument Panel)
	106 (RHD)	Floor Wire and Instrument Panel Wire (Right Side of Instrument Panel)
IF1	100 (LHD)	Front Door RH Wire and Instrument Panel Wire (Right Kick Panel)
IF2		
BD1	102 (LHD)	Rear Window No.1 Wire and Back Door No.1 Wire (Right Side of Back Door)
	110 (RHD)	
BF1	102 (LHD)	Back Door No.1 Wire and Floor Wire (Right Side of Back Door)
	110 (RHD)	

▽ : GROUND POINTS

Code	See Page	Ground Points Location
ID	98 (LHD)	Left Kick Panel
IF	98 (LHD)	Right Kick Panel
BH	102 (LHD)	Left Side of Back Door
	110 (RHD)	

⬡ : SPLICE POINTS

Code	See Page	Wire Harness with Splice Points	Code	See Page	Wire Harness with Splice Points
I1	100 (LHD)	Instrument Panel Wire			

TWO WAY FLOW HEATER

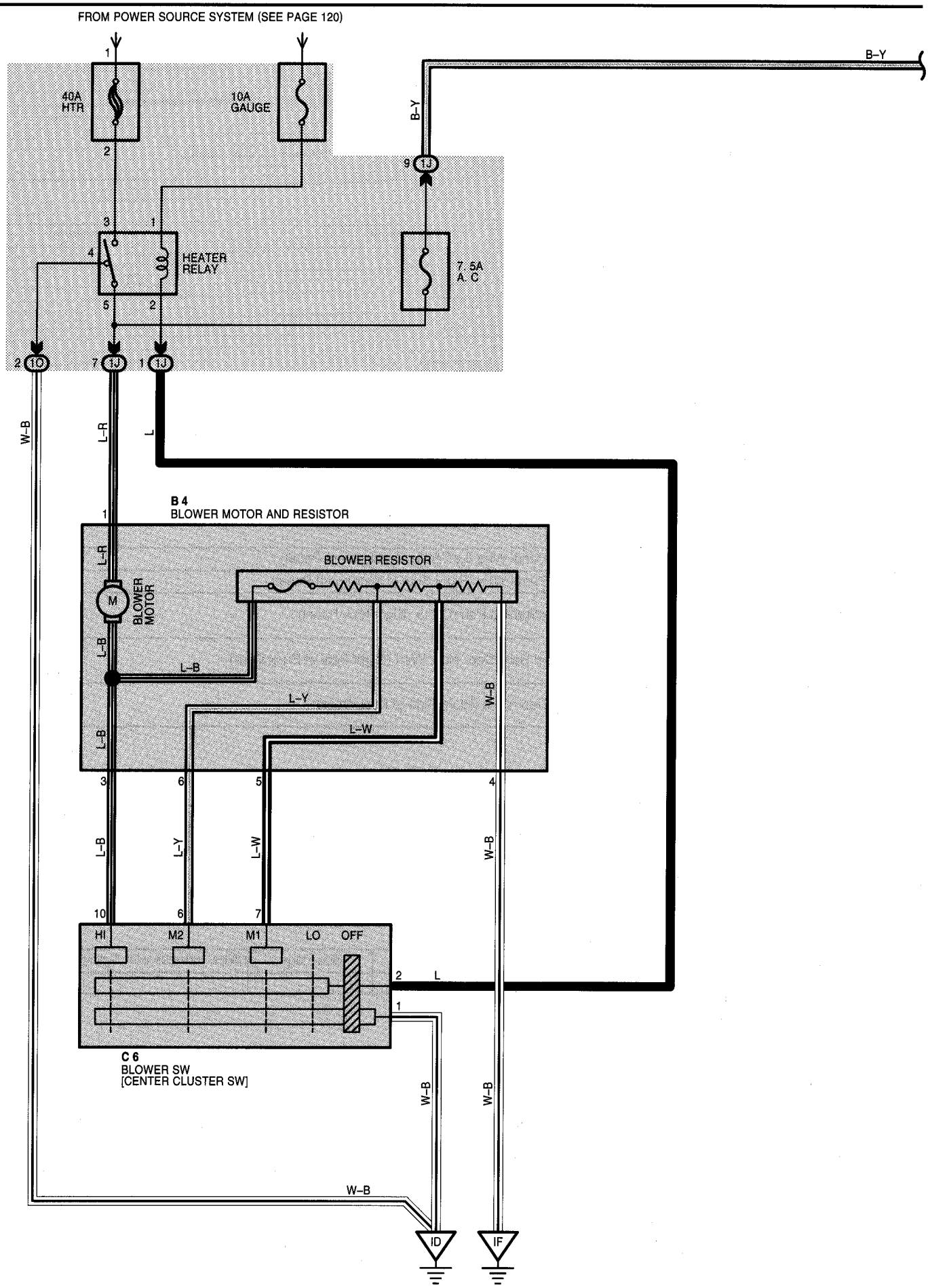

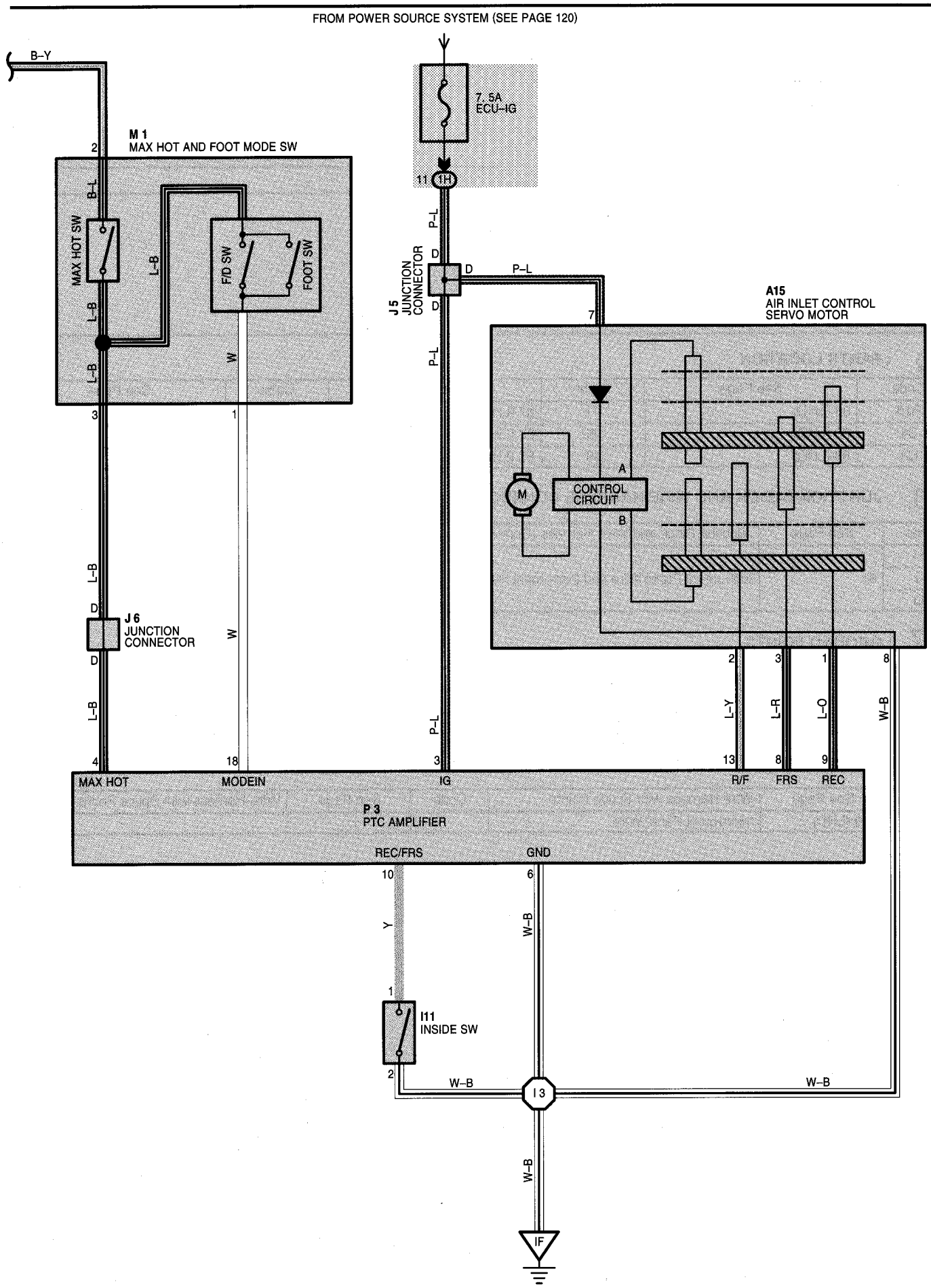
FROM POWER SOURCE SYSTEM (SEE PAGE 120)
B-Y
7.5A
ECU-IG
M 1
MAX HOT AND FOOT MODE SW
MAX HOT SW
F/D SW
FOOT SW
B-L
L-B
W
P-L
J 5
JUNCTION
CONNECTOR
A15
AIR INLET CONTROL
SERVO MOTOR
CONTROL
CIRCUIT
M
J 6
JUNCTION
CONNECTOR
L-Y
L-R
L-O
W-B
MAX HOT
MODEIN
IG
R/F
FRS
REC
P 3
PTC AMPLIFIER
REC/FRS
GND
Y
I11
INSIDE SW
I 3
IF

TWO WAY FLOW HEATER

SYSTEM OUTLINE

When all of the following conditions are met, the recirculation/fresh air inlet damper is switched to the DUAL MODE position.
* The recirculation/fresh air switch is at FRESH position
* The blower SW is on.
* The max hot SW is on.
* The FOOT. F/D SW is at FOOT or FOOT/DEF position.

SERVICE HINTS

I11 INSIDE SW

1-2 : Open with inside SW at FRS position
: Closed with inside SW at REC position

HEATER RELAY

3-5 : Closed with the ignition SW at **ON** position and the blower SW on

○ : PARTS LOCATION

Code	See Page	Code	See Page	Code	See Page
A15	86 (LHD)	I11	87 (LHD)	M1	87 (LHD)
B4	86 (LHD)	J5	87 (LHD)	P3	87 (LHD)
C6	86 (LHD)	J6	87 (LHD)		

: JUNCTION BLOCK AND WIRE HARNESS CONNECTOR

Code	See Page	Junction Block and Wire Harness (Connector Location)
1H	81	Instrument Panel Wire and Instrument Panel J/B (Lower Finish Panel)
1J		
1O		

▽ : GROUND POINTS

Code	See Page	Ground Points Location
ID	98 (LHD)	Left Kick Panel
IF	98 (LHD)	Right Kick Panel

⬡ : SPLICE POINTS

Code	See Page	Wire Harness with Splice Points	Code	See Page	Wire Harness with Splice Points
I3	100 (LHD)	Instrument Panel Wire			

PTC HEATER

* 1 : DIGITAL METER TYPE
* 2 : ANALOG METER TYPE

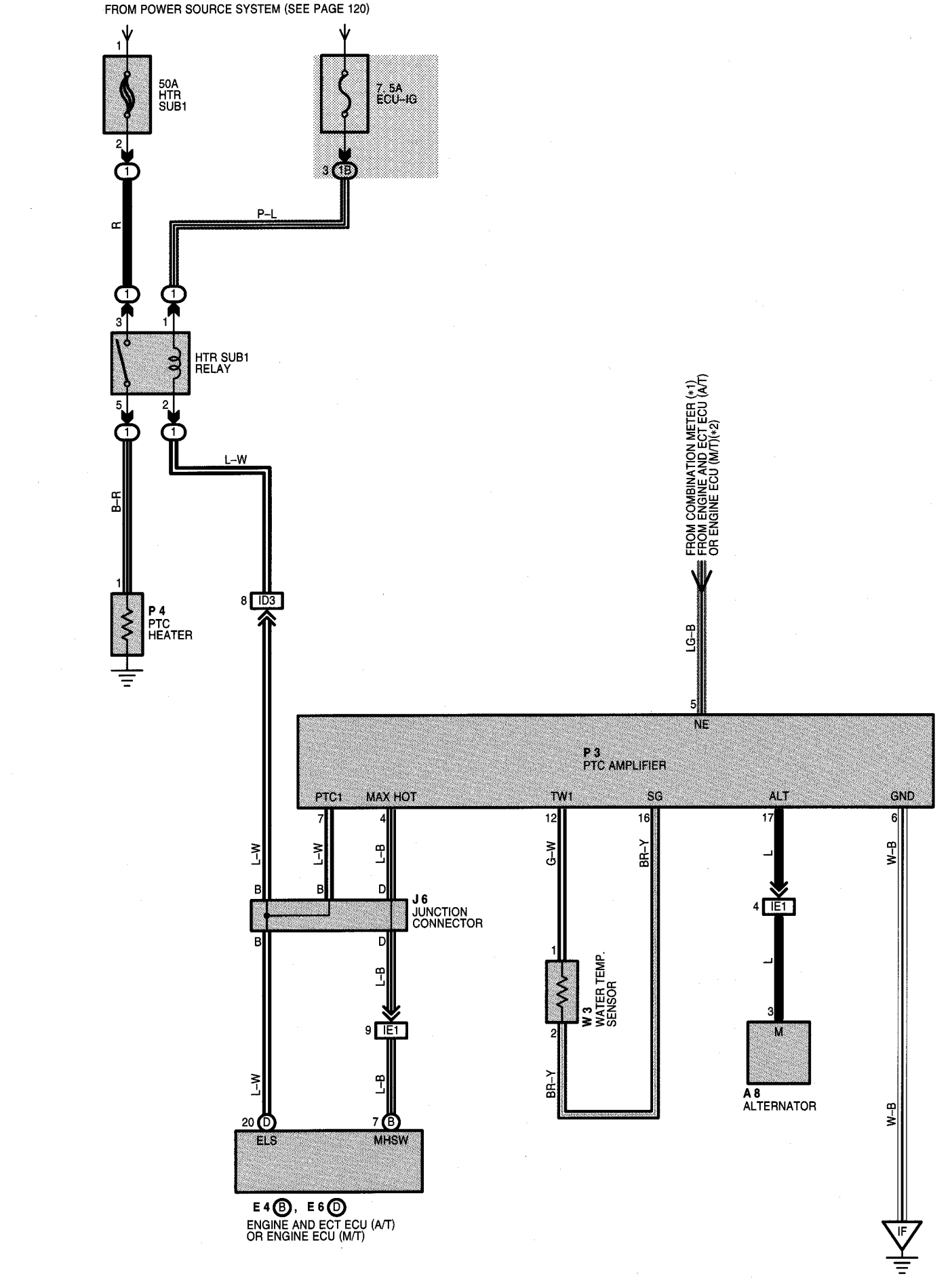

SYSTEM OUTLINE

When all of the following conditions are met, the PTC heater operates.
* The engine coolant temp. has reached the specified temperature.
* The engine RPM has exceeded the specified RPM for more than 5 seconds continuously.
* The max hot SW is on.

If any of the above conditions change, the PTC heater stops.
The PTC heater is turned ON/OFF accoding to the alternator's charge/discharge condition.

SERVICE HINTS

W3 WATER TEMP. SENSOR

1-2 : Approx. **90** kΩ (**-30**°C, **-22**°F)
Approx. **5** kΩ (**25**°C, **77**°F)
Approx. **2.657** kΩ (**40**°C, **104**°F)

P3 PTC AMPLIFIER

6-GROUND : Always continuity

○ : PARTS LOCATION

Code		See Page	Code	See Page	Code	See Page
A8		84 (LHD)	J6	87 (LHD)	W3	87 (LHD)
E4	B	86 (LHD)	P3	87 (LHD)		
E6	D	86 (LHD)	P4	87 (LHD)		

▭ : RELAY BLOCKS

Code	See Page	Relay Blocks (Relay Block Location)
1	78	Engine Room R/B No.1 (Engine Compartment Left)

▭ : JUNCTION BLOCK AND WIRE HARNESS CONNECTOR

Code	See Page	Junction Block and Wire Harness (Connector Location)
1B	80	Engine Room Main Wire and Instrument Panel J/B (Lower Finish Panel)

▭ : CONNECTOR JOINING WIRE HARNESS AND WIRE HARNESS

Code	See Page	Joining Wire Harness and Wire Harness (Connector Location)
ID3	100 (LHD)	Engine Room Main Wire and Instrument Panel Wire (Left Side of Instrument Panel)
IE1	100 (LHD)	Engine Wire and Instrument Panel Wire (Behind the Glove Box)

▽ : GROUND POINTS

Code	See Page	Ground Points Location
IF	98 (LHD)	Right Kick Panel

RADIATOR FAN AND CONDENSER FAN

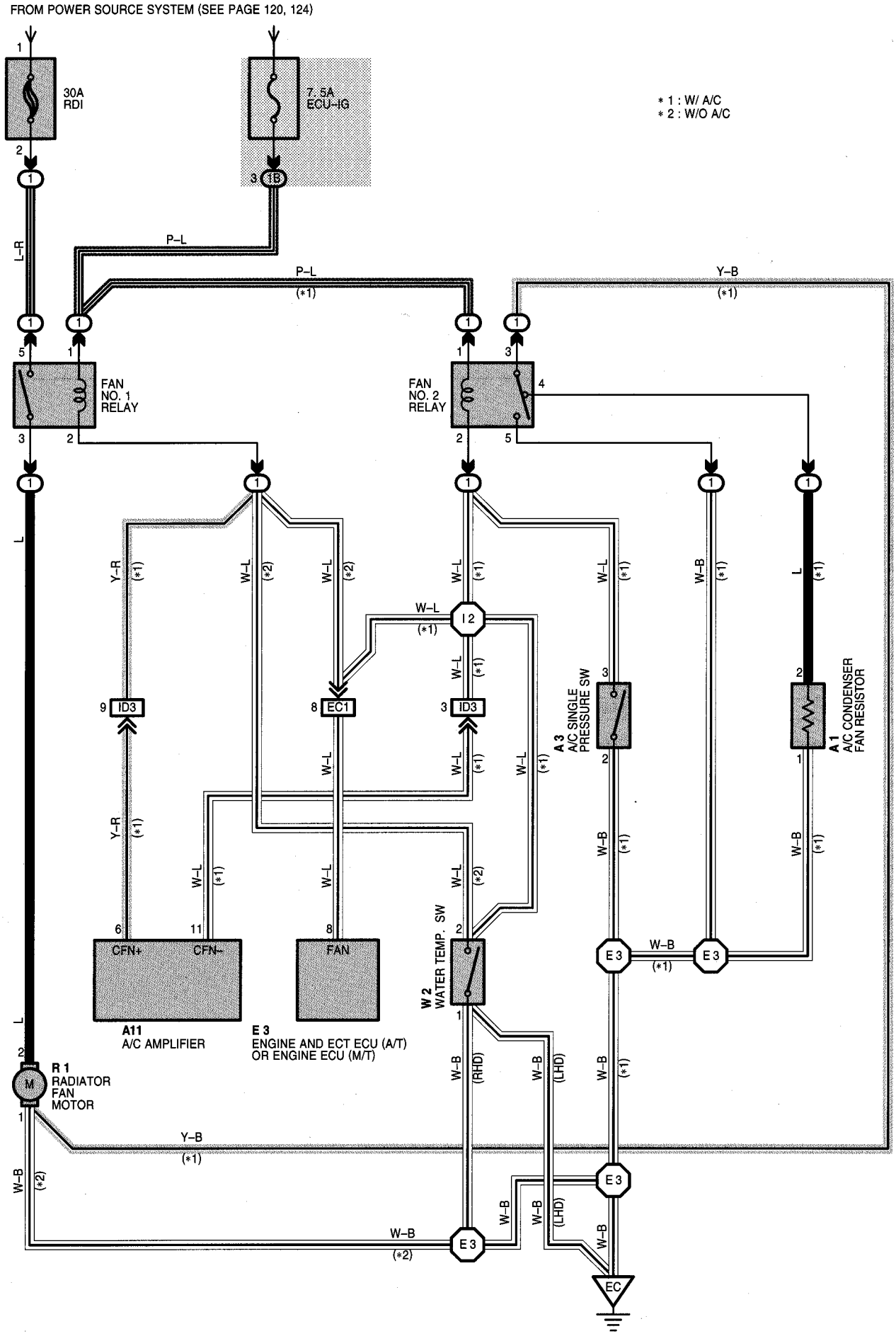

SYSTEM OUTLINE

1. LOW SPEED OPERATION (w/ A/C)

When the A/C system is operating, the FAN NO.1 Relay is turned on. As a result, the current flows from the RDI Fuse to FAN NO.1 relay (Point side) to radiator fan motor TERMINAL 2 to TERMINAL 1 to FAN NO.2 relay TERMINAL 3 to TERMINAL 4 to A/C condenser fan resistor TERMINAL 2 to TERMINAL 1 to GROUND, and the radiator fan motor rotates at low speed.

2. HIGH SPEED OPERATION (w/ A/C)

When the A/C single pressure SW is on or the water temp. SW is turned on, the FAN NO.2 relay is turned on. As a result, the current flows from the FAN NO.1 relay (Point side) to radiator fan motor TERMINAL 2 to TERMINAL 1 to FAN NO.2 Relay TERMINAL 3 to TERMINAL 5 to GROUND, and the radiator fan motor rotates at high speed.

3. FAN MOTOR OPERATION (w/o A/C)

When the water temp. SW is turned on, the FAN NO.1 relay is turned on. As a result, the current flows from the RDI FAN fuse to FAN NO.1 relay (Point side) to radiator fan motor TERMINAL 2 to TERMINAL 1 to GROUND, and the radiator fan motor rotates.

SERVICE HINTS

A3 A/C SINGLE PRESSURE SW

2-3 : Open above approx. **12.5** kgf/cm^2 (**178** psi, **1225** kpa)
Close below approx. **15.5** kgf/cm^2 (**220** psi, **1520** kpa)

○ : PARTS LOCATION

Code	See Page	Code	See Page	Code	See Page
A1	84 (LHD)	A11	86 (LHD)	R1	85 (LHD)
	90 (RHD)		92 (RHD)		91 (RHD)
A3	84 (LHD)	E3	86 (LHD)	W2	85 (LHD)
	90 (RHD)		92 (RHD)		91 (RHD)

▭ : RELAY BLOCKS

Code	See Page	Relay Blocks (Relay Block Location)
1	78	Engine Room R/B No.1 (Engine Compartment Left)

▭ : JUNCTION BLOCK AND WIRE HARNESS CONNECTOR

Code	See Page	Junction Block and Wire Harness (Connector Location)
1B	80	Engine Room Main Wire and Instrument Panel J/B (Lower Finish Panel)

▭ : CONNECTOR JOINING WIRE HARNESS AND WIRE HARNESS

Code	See Page	Joining Wire Harness and Wire Harness (Connector Location)
EC1	96 (LHD)	Engine Wire and Engine Room Main Wire (Inside of Engine Room R/B No.1)
	104 (RHD)	
ID3	100 (LHD)	Engine Room Main Wire and Instrument Panel Wire (Left Side of Instrument Panel)
	108 (RHD)	Engine Room Main Wire and Instrument Panel Wire (Right Side of Instrument Panel)

▽ : GROUND POINTS

Code	See Page	Ground Points Location
EC	96 (LHD)	Front Left Fender Apron
	104 (RHD)	

⬡ : SPLICE POINTS

Code	See Page	Wire Harness with Splice Points	Code	See Page	Wire Harness with Splice Points
E3	96 (LHD)	Engine Room Main Wire	I2	100 (LHD)	Engine Room Main Wire
	104 (RHD)			108 (RHD)	

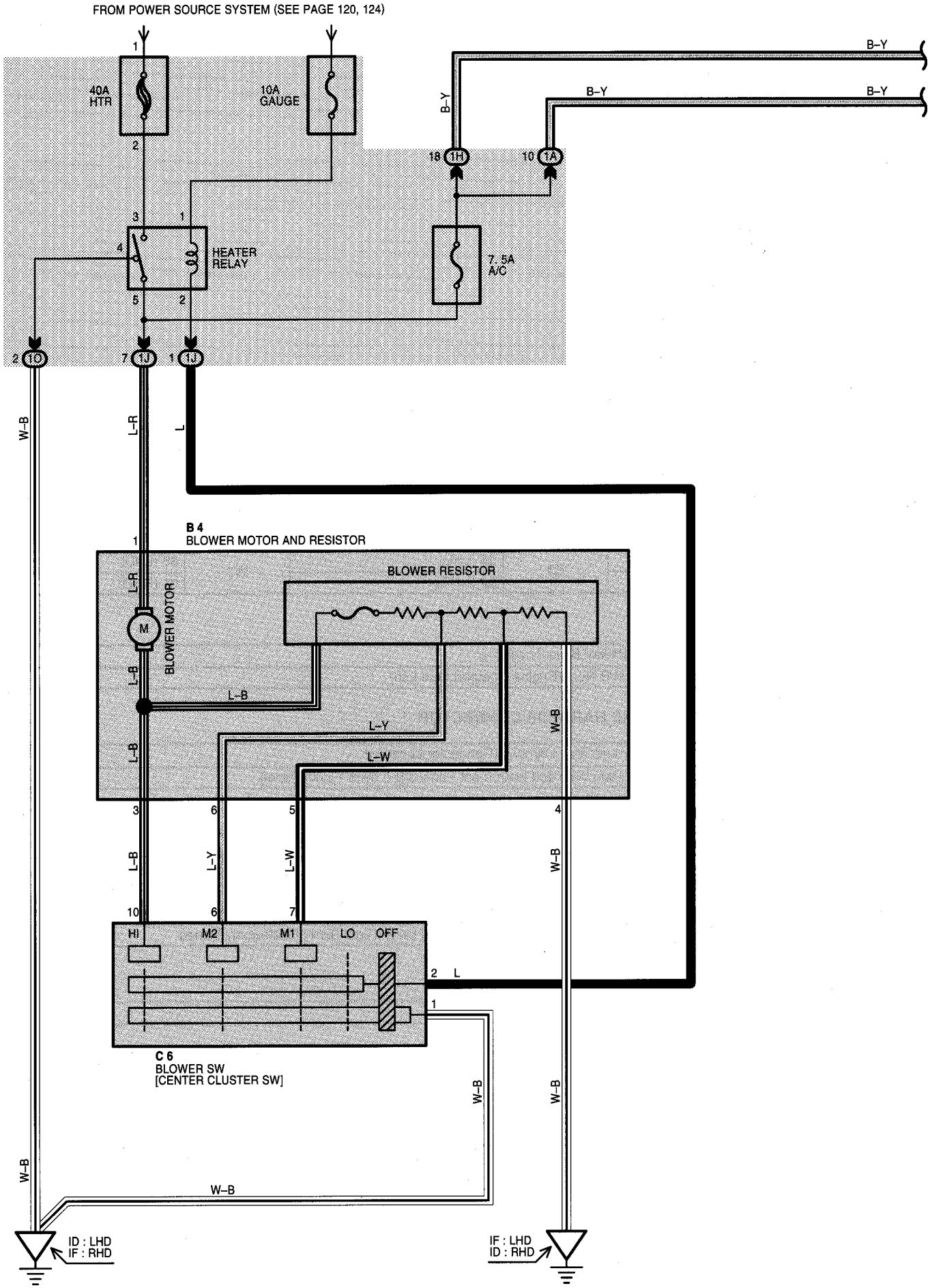
FROM POWER SOURCE SYSTEM (SEE PAGE 120, 124)
40A HTR
10A GAUGE
HEATER RELAY
7.5A A/C
B-Y
W-B
L-R
L
B 4
BLOWER MOTOR AND RESISTOR
BLOWER RESISTOR
BLOWER MOTOR
L-B
L-Y
L-W
HI
M2
M1
LO
OFF
C 6
BLOWER SW
[CENTER CLUSTER SW]
ID : LHD
IF : RHD
IF : LHD
ID : RHD

* 1 : BOOST VENTILATOR TYPE

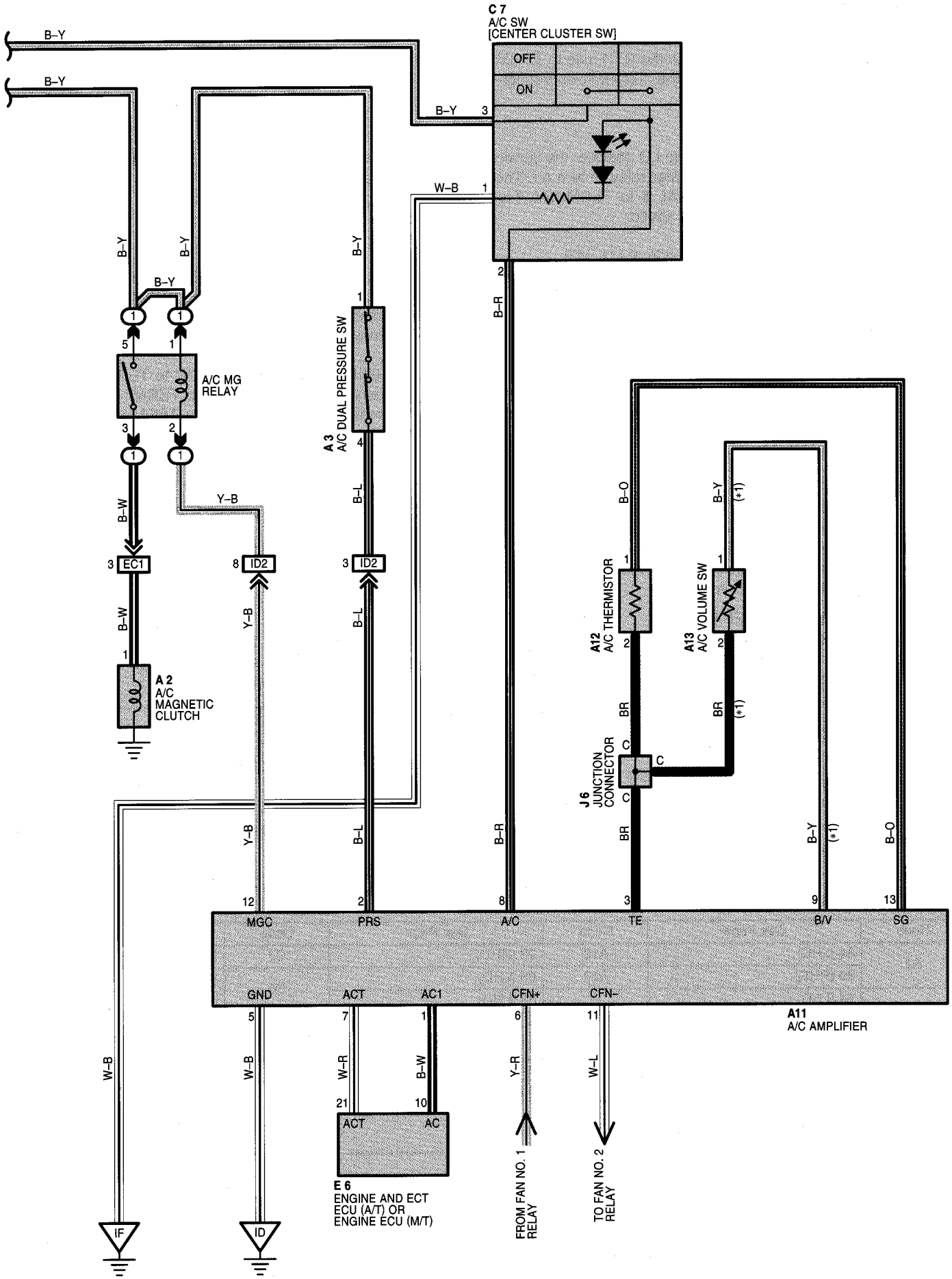

SYSTEM OUTLINE

1. HEATER BLOWER MOTOR OPERATION

Current is applied at all times through the HTR fuse to TERMINAL 3 of the heater relay.
When the ignition SW is turned on, the current flows through GAUGE fuse to TERMINAL 1 of the heater relay to TERMINAL 2 of the blower SW.

* Low speed operation
  When the blower SW is moved to LO position, the current flows the to TERMINAL 2 of the blower SW to TERMINAL 1 to GROUND, causing the front heater relay to turn on. This causes the current to flow from the HTR fuse to TERMINAL 3 of the heater relay to TERMINAL 5 to TERMINAL 1 of the blower motor and resistor to TERMINAL 4 to GROUND, rotating the blower motor at low speed.

* Medium speed operation (Operation at M1, M2)
  When the blower SW is moved to M1 position, the current flows to TERMINAL 2 of the blower SW to TERMINAL 1 to GROUND, causing the heater relay to turn on. This causes the current flows from the HTR fuse to TERMINAL 3 of the heater relay to TERMINAL 5 to TERMINAL 1 of the blower motor and resistor to TERMINAL 5 to TERMINAL 7 of the blower SW to TERMINAL 1 to GROUND. At this time, the blower resistance of the blower resistor is smaller than at low speed, so the blower motor rotates at medium low speed.
  When the blower SW is moved to M2 position, the current flows to TERMINAL 2 of the blower SW to TERMINAL 1 to GROUND, causing the heater relay turn on. This causes the current flows from the HTR fuse to TERMINAL 3 of the heater relay to TERMINAL 5 to TERMINAL 1 of the blower motor and resistor to TERMINAL 6 to TERMINAL 6 of the blower SW to TERMINAL 1 to GROUND. At this time, resistance of the blower resistor is smaller than at M1 position, so the blower motor rotates at medium high speed.

* High speed operation
  When the blower SW is moved to HI position, the current flows to TERMINAL 2 of the blower SW to TERMINAL 1 to GROUND, causing the front heater relay to turn on.
  This causes the current to flow from the HTR fuse to TERMINAL 3 of the heater relay to TERMINAL 5 to TERMINAL 1 of the blower motor and resistor to TERMINAL 3 to TERMINAL 10 of the blower SW to TERMINAL 1 to GROUND, rotating the blower motor at high speed.

2. AIR CONDITIONER OPERATION

When the blower SW is set on, the current from the A/C fuse flows to TERMINAL 1 of the A/C dual pressure SW to TERMINAL 4 to TERMINAL 2 of the A/C amplifier. The engine RPM signal from the engine and ECT ECU (A/T) or Engine ECU (M/T), the evaporator temp. signal from the A/C thermistor are all supplied to the A/C amplifier.

SERVICE HINTS

HEATER RELAY

3-5 : Closed with the ignition SW at **ON** position and the blower SW on

A3 A/C DUAL PRESSURE SW

1-4 : Open with the refrigerant pressure at less than approx. **196** Kpa (**2.0** kgf/cm^2, **28.4** psi) or more than approx. **3140** Kpa (**32** kgf/cm^2, **455** psi)

○ : PARTS LOCATION

Code	See Page	Code	See Page	Code	See Page
A2	84 (LHD)	A12	92 (RHD)	C7	92 (RHD)
	90 (RHD)	A13	86 (LHD)	E6	86 (LHD)
A3	84 (LHD)	B4	86 (LHD)		92 (RHD)
	90 (RHD)		92 (RHD)	J6	87 (LHD)
A11	86 (LHD)	C6	86 (LHD)		93 (RHD)
	92 (RHD)		92 (RHD)		
A12	86 (LHD)	C7	86 (LHD)		

▭ : RELAY BLOCKS

Code	See Page	Relay Blocks (Relay Block Location)
1	78	Engine Room R/B No.1 (Engine Compartment Left)

: JUNCTION BLOCK AND WIRE HARNESS CONNECTOR

Code	See Page	Junction Block and Wire Harness (Connector Location)
1A	80	Engine Room Main Wire and Instrument Panel J/B (Lower Finish Panel)
1H	81	Instrument Panel Wire and Instrument Panel J/B (Lower Finish Panel)
1J		
1O		

: CONNECTOR JOINING WIRE HARNESS AND WIRE HARNESS

Code	See Page	Joining Wire Harness and Wire Harness (Connector Location)
EC1	96 (LHD)	Engine Wire and Engine Room Main Wire (Inside of Engine Room R/B No.1)
	104 (RHD)	
ID2	100 (LHD)	Engine Room Main Wire and Instrument Panel Wire (Left Side of Instrument Panel)
	108 (RHD)	Engine Room Main Wire and Instrument Panel Wire (Right Side of Instrument Panel)

: GROUND POINTS

Code	See Page	Ground Points Location
ID	98 (LHD)	Left Kick Panel
	106 (RHD)	
IF	98 (LHD)	Right Kick Panel
	106 (RHD)	